CITY OF WIMBERLEY

WASTEWATER TREATMENT PLANT PROJECT

SHEET INDEX

DWG NO.	DESCRIPTION
GENERAL	
G-000	LOCATION MAP AND INDEX - COLLECTION
G-001	LOCATION MAP AND INDEX - PLANT
G-002	GENERAL NOTES I
G-003	GENERAL NOTES II
G-004	GRAVITY LINE SITE PLAN
G-005	FORCE MAIN SITE PLAN
G-006	RECLAIMED WATER SITE PLAN
GRAVITY LINE PLAN AND PROFILE	
C-001	GRAVITY LN A STA 1+00 TO STA 6+00
C-002	GRAVITY LN A STA 6+00 TO STA 11+00
C-003	GRAVITY LN A STA 11+00 TO STA 16+00
C-004	GRAVITY LN A STA 16+00 TO STA 21+00
C-005	GRAVITY LN A STA 21+00 TO STA 26+00
C-006	GRAVITY LN A STA 26+00 TO STA 30+00
C-007	GRAVITY LN A STA 30+00 TO STA 31+91
C-008	GRAVITY LN B STA 1+00 TO STA 6+00
C-009	GRAVITY LN B STA 6+00 TO STA 11+00
C-010	GRAVITY LN B STA 11+00 TO STA 12+60
C-011	GRAVITY LN C STA 1+00 TO STA 5+50
C-012	GRAVITY LN C STA 5+50 TO STA 8+63
C-013	GRAVITY LN D STA 1+00 TO STA 6+00
C-014	GRAVITY LN D STA 6+00 TO STA 11+00
C-015	GRAVITY LN D STA 11+00 TO STA 16+00
C-016	GRAVITY LN D STA 16+00 TO STA 21+00
C-017	GRAVITY LN D STA 21+00 TO STA 26+00
C-018	GRAVITY LN D STA 26+00 TO STA 26+49
C-019	GRAVITY LN E STA 1+00 TO STA 5+38
C-020	GRAVITY LN F STA 1+00 TO STA 3+63
C-021	GRAVITY LN G STA 1+00 TO STA 4+22
C-022	GRAVITY LN H STA 1+00 TO STA 4+40
C-023	GRAVITY LN I STA 1+00 TO STA 5+50
C-024	GRAVITY LN I STA 5+50 TO STA 10+00
C-025	GRAVITY LN I STA 10+00 TO STA 12+53
C-026	GRAVITY LN J STA 1+00 TO STA 6+00
C-027	GRAVITY LN J STA 6+00 TO STA 11+00
C-028	GRAVITY LN J STA 11+00 TO STA 15+55
C-029	GRAVITY LN K STA 1+00 TO STA 6+00
C-030	GRAVITY LN K STA 6+00 TO STA 9+92
RANCH ROAD PUMP STATION	
M-050	PUMP STATION PLAN AND SECTION
FORCE MAIN PLAN AND PROFILE	
C-100	LN A STA 1+00 TO STA 5+50
C-101	LN A STA 5+50 TO STA 10+00
C-102	LN A STA 10+00 TO STA 14+50
C-103	LN A STA 14+50 TO STA 19+00
C-104	LN A STA 19+00 TO STA 23+50
C-105	LN A STA 23+50 TO STA 28+00
C-106	LN A STA 28+00 TO STA 32+50
C-107	LN A STA 35+50 TO STA 37+00
C-108	LN A STA 37+00 TO STA 41+50
C-109	LN A STA 41+50 TO STA 46+00
C-110	LN A STA 46+00 TO STA 50+50
C-111	LN A STA 50+50 TO STA 55+00
C-112	LN A STA 55+00 TO STA 59+24
C-113	LN B STA 1+00 TO STA 5+50
C-114	LN B STA 5+50 TO STA 9+00
C-115	LN B STA 9+00 TO STA 10+30
MBR PACKAGE PLANT	
C-200	SITE PLAN
M-200	PACKAGE PLANT PLAN
M-201	PACKAGE PLANT SECTIONS
M-203	EFFLUENT PLAN AND PROFILE
M-204	EFFLUENT OUTFALL STRUCTURE
RECLAIMED WATER SYSTEM	
M-300	PUMP STATION PLAN
M-301	PUMP STATION SECTIONS
M-302	STORAGE TANK PLAN
M-303	STORAGE TANK SECTION
RECLAIMED WATER SYSTEM: RECLAIMED WATERLINE PLANS	
C-300	IRRIGATION LAYOUT
C-301	IRRIGATION NOTES AND DETAILS
C-302	RW LN A STA 1+00 TO STA 9+00
C-303	RW LN A STA 9+00 TO STA 17+00
C-304	RW LN A STA 17+00 TO STA 25+00
C-305	RW LN A STA 25+00 TO STA 33+00
C-306	RW LN A STA 33+00 TO STA. 41+00
C-307	RW LN A STA 41+00 TO STA 49+00
C-308	RW LN A STA 49+00 TO STA 57+00
C-309	RW LN A STA 57+00 TO STA 65+00
C-310	RW LN A STA 65+00 TO STA 67+81
C-311	RW-LN B STA 1+00 TO STA 9+00
C-312	RW-LN B STA 9+00 TO STA 17+00
C-313	RW-LN B STA 17+00 TO STA 25+00
C-314	RW-LN B STA 25+00 TO STA 31+63
C-315	RW-LN C STA 1+00 TO STA 9+00
C-316	RW-LN C STA 9+00 TO STA 14+39
C-317	RW-LN D STA 1+00 TO STA 8+32
STANDARD DETAILS	
C-1000	CIVIL I
C-1001	CIVIL II
C-1002	CIVIL III
C-1003	CIVIL IV
C-1004	CIVIL V
C-1005	CIVIL VI
C-1006	CIVIL VII
M-1000	MECHANICAL I
M-1001	MECHANICAL II
M-1002	MECHANICAL III
M-1003	MECHANICAL IV
S-1000	STRUCTURAL I
ELECTRICAL	
E-001	LEGEND
RANCH ROAD PUMP STATION	
E-150	SITE PLAN AND ONE-LINE
E-151	PLAN AND SECTION
E-152	GRINDER STATIONS ONE-LINE AND DETAILS
MBR PACKAGE PLANT	
E-200	PLAN
TRANSFER AND RECLAIMED WATER SYSTEM	
E-300	SITE PLAN
E-301	ONELINE DIAGRAM
E-302	SCHEDULES AND DIAGRAMS
E-303	BUILDING POWER PLAN
E-304	BUILDING PLAN AND DETAILS
E-305	BUILDING AND GENERATOR FOUNDATIONS
E-306	PUMP STATION PLAN
E-307	STORAGE TANK PLAN
STANDARD DETAILS	
E-900	DETAILS I
E-901	DETAILS II
INSTRUMENTATION	
I-201	PROCESS INSTRUMENTATION DIAGRAM

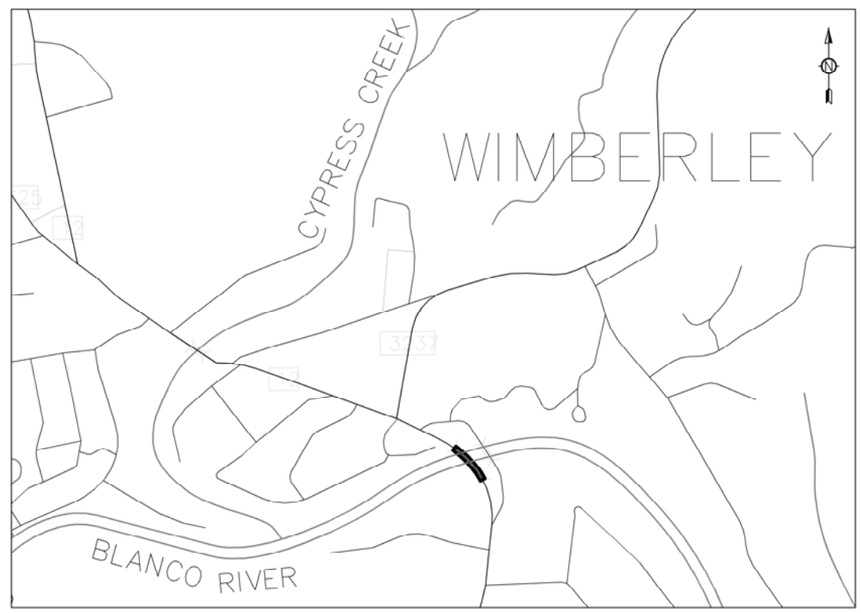

PROJECT LOCATION MAP

FEBRUARY

2017

ALAN PLUMMER ASSOCIATES, INC.
ENVIRONMENTAL ENGINEERS AND SCIENTISTS
6300 LA CALMA DRIVE, SUITE 400
AUSTIN, TEXAS 78752-3843
PHONE: 512-452-5905 FAX: 512-452-2325
TEXAS REGISTERED ENGINEERING FIRM F-13

PROJECT NUMBER 1732-002-01

UTILITY CONTACTS:

Dig Tess	800.344.8377
City Administrator	512.847.0025
TxDOT	512.353.1061
Century Telephone	512.754.5223
AT&T	800.464.7928
Gas Company	512.392.6672
Time Warner Cable	512.805.2555
Grande	800.218.5725
Pedernales Electric	888.554.4732
Bluebonnet Electric	800.949.4414
Wimberley Water Supply Corporation	512.847.2323
Aqua Texas	877.987.2782
Union Pacific Railroad	402.544.8620
TCEQ	512.339.1000

NOTE:
CHECK TO ENSURE UP TO DATE UTILITY CONTACT INFORMATION.

ECONOMIC DEVELOPMENT ADMINISTRATION
FEDERAL AWARD ID NO. 08-01-05136

MAYOR
MAC MCCULLOUGH

CITY COUNCIL

BOB DUSSLER	PLACE 1
CRAIG FORE	PLACE 2
SALLY TRAPP	PLACE 3
GARY BARCHFELD	PLACE 4
JOHN WHITE	PLACE 5

CITY ADMINISTRATOR
DON FERGUSON

OWNER:
CITY OF WIMBERLEY
221 STILLWATER
WIMBERLEY, TEXAS 78676
(512) 847-0025

SURVEYOR:
MACIAS AND ASSOCIATES, LP.
5410 SOUTH 1ST STREET
AUSTIN, TEXAS 78745
(512) 442-7875

SUBMITTED FOR APPROVAL BY:

STATE OF TEXAS
STEPHEN J. COONAN
65516
LICENSED
PROFESSIONAL ENGINEER

Stephen J Coonan

STEPHEN J. COONAN, PE
ALAN PLUMMER ASSOCIATES, INC.

03/06/17
DATE

FLOODPLAIN:
A PORTION OF THE PROJECT LIES WITHIN THE 1% ANNUAL CHANCE FLOODPLAIN AS SHOWN IN THE FEDERAL EMERGENCY MANAGEMENT (FEMA) FLOOD INSURANCE RATE MAP (FIRM) PANELS 48209C0239F AND 48209C0355F
DATED SEPTEMBER 2, 2005

PRINTED: 3/7/2017 3:06 PM m:\Projects\1732\002-01\Acad\sheetfiles\G-001.dwg SAVED: 3/6/2017 3:29 PM BY USER: CSYWARTH

CAPITAL IMPROVEMENTS DEPARTMENT
GENERAL CONSTRUCTION NOTES

1. THE FOLLOWING CITY GUIDELINES SUPERSEDE, AS A MINIMUM REQUIREMENT, ANY AND ALL COMMENTS, SPECIFICATIONS, OR DETAILS LISTED ON THE PLAN OR TECHNICAL SPECIFICATIONS. NO NOTES SHALL BE CONSIDERED AS SEPARATE PAY ITEMS.

2. THE CONTRACTOR IS RESPONSIBLE FOR OBTAINING AND COMPLYING WITH ALL LOCAL, STATE, AND FEDERAL LAWS, RULES AND ORDINANCES, AND THE CITY OF SAN MARCOS MOST RECENT DIVISION 1 SPECIFICATIONS, MODIFICATIONS TO CITY OF AUSTIN SPECIFICATIONS AND DETAILS. ALL CONSTRUCTION SHALL BE IN ACCORDANCE WITH THE LATEST CITY OF AUSTIN SPECIFICATIONS AND DETAILS. CITY OF AUSTIN STANDARDS SHALL BE USED UNLESS OTHERWISE NOTED. ALL PHASES OF WORK UNDER THIS CONTRACT SHALL BE WITH STRICT ADHERENCE TO THE ACCOMPANYING SPECIFICATIONS. FINAL DECISIONS OR JUDGMENT ON MATTERS NOT SPECIFICALLY COVERED BY THE CONTRACT DOCUMENTS SHALL BE MADE BY THE OWNER.

3. A COPY OF PLANS, AND ALL CHANGES OR REVISED PLANS, SPECS, AND APPROVED SUBMITTALS THAT BEAR A REVIEW SEAL FROM THE ENGINEER MUST BE AVAILABLE ON-SITE AT ALL TIMES. ANY CHANGES OR REVISIONS TO THESE PLANS REQUIRE THE OWNER'S APPROVAL. SUBMIT REVISED PLANS TO THE OWNER FOR REVIEW AND WRITTEN APPROVAL.

4. CONTRACTOR AGREES THAT HE SHALL ASSUME SOLE AND COMPLETE RESPONSIBILITY FOR JOB SITE CONDITIONS DURING THE CONSTRUCTION OF THE PROJECT INCLUDING SAFETY OF ALL PERSONS AND PROPERTY. THIS REQUIREMENT SHALL APPLY CONTINUOUSLY AND NOT BE LIMITED TO NORMAL WORKING HOURS. THE CONTRACTOR SHALL DEFEND, INDEMNIFY AND HOLD HARMLESS THE OWNERS AND THE ENGINEERS FROM ANY AND ALL LIABILITY, REAL OR ALLEGED, IN CONJUNCTION WITH THE PERFORMANCE OF THE WORK ON THIS PROJECT, EXCEPT FROM LIABILITY ARISING FROM THE SOLE NEGLIGENCE OF THE OWNER OR THE ENGINEER RELATED TO ACTIONS OF SAME WHILE ON SITE. MAINTENANCE OF BMP'S IS THE SOLE RESPONSIBILITY OF THE CONTRACTOR AND FINES RECEIVED BECAUSE OF NEGLIGENCE OF THE CONTRACTOR WILL BE THE CONTRACTOR'S RESPONSIBILITY.

5. THE CONTRACTOR MUST SUBMIT AND COORDINATE A CONSTRUCTION SCHEDULE WITH THE OWNER PRIOR TO COMMENCING WORK.

6. ALL SUBMITTALS SHALL BE APPROVED BY THE OWNER PRIOR TO INSTALLATION.

7. CONTRACTOR SHALL BE RESPONSIBLE FOR RESTORING ADJOINING AND ADJACENT STREETS, SIDEWALKS, CURBS, TURF, LANDSCAPING, PRIVATE PROPERTY, AND/OR OTHER RIGHT-OF-WAY DISTURBED DURING CONSTRUCTION TO ITS ORIGINAL CONDITION AND TO THE SATISFACTION OF THE CITY PRIOR TO ACCEPTANCE OF THE PROJECT. ANY DAMAGE DONE IS THE RESPONSIBILITY OF THE CONTRACTOR (NO SEPARATE PAY ITEM).

8. THE CONTRACTOR IS RESPONSIBLE FOR PROVIDING REQUIRED SECURITY AND FENCING TO PROTECT HIS OWN PROPERTY, EQUIPMENT AND WORK IN PROGRESS. REPAIR OF DAMAGED IMPROVEMENTS IS THE CONTRACTOR'S RESPONSIBILITY UNTIL THE PROJECT IS ACCEPTED BY THE OWNER.

9. CONTRACTOR SHALL SUBMIT PRECONSTRUCTION VIDEOS AND PHOTOGRAPHY NECESSARY TO DOCUMENT PRECONSTRUCTION CONDITIONS, INCLUDING BUT NOT LIMITED TO STREETS, CURBS, DRIVEWAYS, SIDEWALKS, MAIL BOXES, FENCES, ETC. ALSO, ALL SANITARY SEWER LINES SHALL BE CLEANED AND TELEVISED PRIOR TO CONSTRUCTION ACTIVITY PER CITY OF SAN MARCOS DIVISION 1 SPECIFICATIONS. PRECONSTRUCTION VIDEO SHALL BE IN WINDOWS MEDIA FORMAT OR APPROVED EQUAL. PRECONSTRUCTION VIDEOS SHALL BE COMPLETED WITH A CITY INSPECTOR ON SITE AND SUBMITTED TO THE OWNER FOR APPROVAL PRIOR. PROVIDE TWO (2) COPIES OF THE PRECONSTRUCTION VIDEO TO THE OWNER.

10. CONTRACTOR SHALL RELOCATE EXISTING FENCES, VEHICULAR AND PEDESTRIAN GATES TO OR BEYOND THE EXISTING RIGHT-OF-WAY UNLESS OTHERWISE INDICATED ON PLANS. CONTRACTOR SHALL COORDINATE FENCE RELOCATION WITH THE RESPECTIVE PROPERTY OWNERS. RELOCATED FENCES/GATES SHALL BE EQUIVALENT OR BETTER THAN EXISTING FENCE/GATES. RELOCATION WILL BE SUBSIDIARY TO THE WORK UNLESS NOTED AS A SEPARATE BID ITEM.

11. THE CONTRACTOR IS RESPONSIBLE FOR REPAIRING ALL STREETS OUTSIDE THE PROJECT LIMITS WHICH ARE DAMAGED DUE TO CONSTRUCTION ACTIVITIES. THE REPLACED SECTION MUST BE APPROVED BY THE CITY AND THE OWNER.

12. CONTRACTOR SHALL FOLLOW THE STANDARD TRAFFIC CONTROL DETAILS INCLUDED IN THIS SET OF PLANS AND THE LATEST EDITION OF THE TEXAS MANUAL ON TRAFFIC CONTROL DEVICES. CONTRACTOR MUST SUBMIT A ROAD CLOSURE PERMIT APPLICATION TO THE OWNER. THE APPLICATION MUST INCLUDE A TRAFFIC CONTROL PLAN, SHOWING BOTH DAYTIME AND NIGHTTIME OPERATIONS DURING VARIOUS PHASES OF CONSTRUCTION. IF A NIGHT TIME CLOSURE IS REQUESTED, THE PLAN MUST BE SEALED BY A PROFESSIONAL ENGINEER. THE PLAN MUST BE APPROVED BY THE OWNER AND BY THE CITY 14 CALENDAR DAYS BEFORE CONSTRUCTION BEGINS. THE RIGHTS-OF-WAY CONSTRUCTION PERMIT APPLICATION CAN BE FOUND ON THE CITY'S WEBSITE - http://www.cityofwimberley.com/vertical/sites/%7B140989A8-309D-4E90-A37A-F257BF123B26%7D/uploads/Rights-of-Way_Construction_App.pdf

13. ANY ROAD CLOSURE MUST HAVE WORK PERFORMED AT THAT LOCATION AT LEAST FOUR (4) HOURS PER DAY. IF WORK CEASES FOR FOUR (4) OR MORE HOURS, THE ROAD MUST BE OPENED UNLESS OTHERWISE APPROVED BY THE OWNER AND THE CITY.

14. ALL SIDEWALKS AND DRIVEWAYS SHALL COMPLY WITH CITY, STATE AND FEDERAL ACCESSIBILITY REQUIREMENTS.

15. CONTRACTOR SHALL VERIFY ALL DIMENSIONS, ELEVATIONS AND CONTOURS IN THE FIELD BEFORE MOBILIZATION AND REPORT ANY DISCREPANCIES WITHIN THE PLANS TO THE OWNER IN A TIMELY MANNER. ALL DIMENSIONS SHOWN ARE APPROXIMATE. "MATCH EXISTING" SIGNIFIES VERTICAL AND HORIZONTAL ALIGNMENT. CHANGES IN ANY HORIZONTAL OR VERTICAL POSITION OR ALIGNMENT ARE SUBJECT TO OWNER REVIEW AND APPROVAL.

16. CONTRACTOR SHALL CONSTRUCT FACILITIES TO THE LINES AND GRADES REQUIRED ON THE PLANS AND TO MEET FIELD CONDITIONS. FINAL GRADES SHALL BE ESTABLISHED TO ASSURE POSITIVE DRAINAGE. ADJUSTMENTS TO MATCH FIELD CONDITIONS DO NOT WARRANT ADDITIONAL PAYMENT TO THE CONTRACTOR.

17. MILLED ASPHALT WILL BECOME THE PROPERTY OF THE CONTRACTOR UNLESS DIRECTED BY THE CITY.

18. THE PRIME COATING OF FLEX BASE SHALL BE PERFORMED IMMEDIATELY FOLLOWING DENSITY TESTING AND PROOF ROLLING.

19. DURING NON-WORK HOURS, CONTRACTOR MUST COVER OR FILL ALL TRENCHES TO ALLOW FOR CONTINUED ACCESS FOR RESIDENTS UNLESS SPECIFICALLY APPROVED BY THE INSPECTOR.

20. CONSTRUCTION NOISE, DECLARED A NUISANCE UNDER CITY ORDINANCE, IS NOT PERMITTED BETWEEN 9:00 P.M. AND 7:00 A.M. EXCEPT UNDER SPECIAL PERMIT.

21. WEEKEND AND HOLIDAY WORK IS NOT ALLOWED WITHOUT PRIOR APPROVAL AND IS LIMITED TO WORK NOT REQUIRING CITY INSPECTION UNLESS SPECIFICALLY APPROVED BY INSPECTOR.

22. ALL CONSTRUCTION SITES ARE REQUIRED TO PROVIDE ONE BATHROOM UNIT PER TEN (10) CONSTRUCTION PERSONS ON THE PROJECT.

23. CONTRACTOR MUST COMPLY WITH OSHA REGULATIONS AND STATE OF TEXAS LAW CONCERNING EXCAVATION, TRENCHING AND SHORING.

24. A FLOODPLAIN ELEVATION CERTIFICATE (WHERE REQUIRED) MUST BE SUBMITTED TO AND APPROVED BY THE FLOODPLAIN ADMINISTRATOR BEFORE "CERTIFICATE OF OCCUPANCY" WILL BE ISSUED.

25. BLASTING AND BURNING IS PROHIBITED IN THE CITY LIMITS AND WITHIN THE PROJECT LIMITS.

26. CONTRACTOR SHALL KEEP DRIVEWAYS OPEN AND ACCESSIBLE AT ALL TIMES DURING CONSTRUCTION UNLESS OTHERWISE APPROVED. UNDERGROUND UTILITIES CROSSING COMMERCIAL DRIVEWAYS SHALL BE INSTALLED SUCH THAT A MINIMUM TEN (10) FOOT TRAFFIC LANE IS KEPT OPEN AT ALL TIMES. NO CONSTRUCTION OPERATION RELATIVE TO INSTALLATION OF UTILITIES, INCLUDING STOCKPILING OF EXCAVATED MATERIALS, SHALL BE PERMITTED WITHIN THE LIMITS OF EXISTING PAVEMENTS CARRYING TRAFFIC ON STATE HIGHWAYS OR CITY ROADS AND STREETS UNLESS SPECIFICALLY AUTHORIZED IN WRITING BY THE RESPECTIVE AUTHORITY HAVING JURISDICTION OR NOTED ON THE PLANS. SPOILAGE MATERIAL SHALL NOT BE MOUNDED MORE THAN 18"HIGH ADJACENT TO A DRIVEWAY OR INTERSECTION, AND SHALL NOT BE LEFT UNSUPERVISED.

27. CONTRACTOR MUST REMOVE AND DISPOSE OF ALL WASTE MATERIAL GENERATED DURING CONSTRUCTION. WASTE MATERIAL MUST BE REMOVED FROM THE WORK SITE AND LAWFULLY DISPOSED OF IN SUCH A MANNER AS TO NOT DAMAGE THE OWNER OR OTHER PERSON. THE CONTRACTOR MUST PROVIDE A PROOF OF DESTINATION DOCUMENTS UPON REQUEST BY CITY INSPECTORS FOR TRUCKS USED TO DELIVER OR REMOVE MATERIAL OR SPOILS FROM THE JOB SITE.

28. THE CONTRACTOR SHALL NOT PLACE ANY WASTE MATERIAL IN THE 100-YEAR FLOODPLAIN WITHOUT FIRST OBTAINING AN APPROVED FLOODPLAIN DEVELOPMENT PERMIT FROM THE CITY AND/OR COUNTY. MATERIAL, STORAGE, LAY DOWN AND STAGING AREAS MUST BE ON THE SAME SIDE OF ROADWAY AS ADJACENT WORK ZONE. STAGING AREAS ARE NOT TO BE USED FOR STOCKPILING.

29. CONTRACTOR MUST CLEAN MUD, DIRT AND/OR DEBRIS TRACKED OR OTHERWISE TRANSPORTED FROM THE PROJECT SITE ONTO EXISTING STREETS BY ANY VEHICLE THAT EXITS THE SITE. THE RIGHT-OF-WAY SHALL BE KEPT CLEAN AT ALL TIMES. DAILY SWEEPING MAY BE REQUIRED. A CITATION WILL BE ISSUED IF THE RIGHT-OF-WAY IS NOT KEPT CLEAN.

30. THE OWNER SHALL COORDINATE TEMPORARY RELOCATION OF MAILBOXES WITH THE SAN MARCOS POSTMASTER. FINAL LOCATION SHALL BE IN ACCORDANCE WITH THE LOCAL POST OFFICE REQUIREMENTS.

31. WHEN WORK IS PERFORMED ON PRIVATE PROPERTY OR EASEMENTS, ALL LAWN GRASS, SHRUBBERY, FLOWERS, SITE UTILITIES (INCLUDING IRRIGATION SYSTEMS), TREES AND FENCES IN THE WAY OF WORK SHALL BE REMOVED, PROTECTED, AND REPLACED TO THEIR ORIGINAL CONDITION AND POSITION UPON COMPLETION OF THE WORK AT THE CONTRACTOR'S EXPENSE.

32. CONTRACTOR SHALL LOCATE, PROTECT AND MAINTAIN BENCHMARKS, MONUMENTS, CONTROL POINTS AND PROJECT ENGINEERING REFERENCE POINTS. CONTRACTOR SHALL RE-ESTABLISH, AT NO ADDITIONAL COST TO THE OWNER, DISTURBED OR DESTROYED ITEMS BY A REGISTERED PROFESSIONAL LAND SURVEYOR REGISTERED IN THE STATE OF TEXAS.

33. ALL ASSETS (INCLUDING DIRECTIONAL CHANGES, VALVES, MANHOLES, ETC.) CONSTRUCTED WITHIN THE CITY'S RIGHT-OF-WAY MUST BE SUBMITTED TO THE CITY WITH GPS COORDINATES AT THE END OF EACH PROJECT. GPS COORDINATES SHALL BE ON TEXAS STATE PLANE SOUTH CENTRAL FIPS 4204 FEET COORDINATE SYSTEM, AND SUBMITTED IN *.TXT FORMAT.

34. CONTRACTOR SHALL CONFINE CONSTRUCTION OPERATIONS TO AVAILABLE STREET AND PUBLIC RIGHT-OF-WAY UNLESS OTHER RIGHTS-OF-WAY OR TEMPORARY CONSTRUCTION EASEMENTS ARE OBTAINED AND SECURED BY THE CONTRACTOR AT HIS EXPENSE. WRITTEN PROOF AND APPROVAL OF LANDOWNERS AND TENANTS IS REQUIRED FOR OTHER PROPERTIES USED BY CONTRACTOR FOR ANY REASON.

35. WHENEVER POSSIBLE, THE CONTRACTOR WILL REOPEN STREETS WITHIN PROJECT LIMITS TO THROUGH TRAFFIC BY REPAIRING TRENCHES, POTHOLES, AND LEVELING UP WITH ASPHALT. TEMPORARY ACCESS DRIVEWAYS MUST COMPLY WITH CITY STANDARD.

36. AN ALL WEATHER SURFACE ROADWAY AND WORKING FIRE HYDRANT(S) ARE REQUIRED TO BE INSTALLED ON PROPERTY PRIOR TO THE CONSTRUCTION OF COMBUSTIBLE MATERIAL. ROAD BASE ALONE IS NOT ACCEPTABLE.

37. THE SITE, SEPARATE BUILDINGS, ELECTRICAL DISCONNECTS, AND/OR TEMPORARY CONSTRUCTION TRAILERS MUST HAVE AN ADDRESS VISIBLE FROM THE STREET OR ROADWAY. PERMANENT MARKER IS NOT AN APPROVED MARKING DEVICE.

38. CONTRACTOR SHALL PLACE BACKFILL AS PROMPTLY AND AS PRACTICABLE AFTER COMPLETION OF EACH STRUCTURE OR PORTION OF A STRUCTURE. DO NOT PLACE BACKFILL AGAINST CONCRETE WALLS OR SIMILAR STRUCTURES UNTIL CONCRETE HAS CURED AT LEAST SEVEN (7) DAYS.

39. FOR DRIVEWAYS WITH PENETRATIONS AND VEHICULAR GATES, CONTRACTOR SHALL ADJUST FENCE SO THERE IS NO GAP BETWEEN THE BOTTOM OF THE FENCE ADJACENT TO THE DRIVEWAY AND THE GROUND.

40. CONTRACTOR SHALL COMMUNICATE, COORDINATE WITH AND WHEN POSSIBLE ACCOMMODATE DELIVERY SCHEDULES OF ADJACENT BUSINESSES AND FACILITIES.

41. IF ANY IRRIGATION SYSTEMS ARE IMPACTED AND DAMAGED OR NEED TO BE RELOCATED DURING CONSTRUCTION, THE CONTRACTOR MAY BE REQUIRED TO EMPLOY A LICENSED IRRIGATOR TO REPAIR OR ADJUST THE LINE. THIS WORK WILL NOT BE PAID FOR SEPARATELY, BUT WILL BE CONSIDERED SUBSIDIARY TO ITEM 101S, PREPARING RIGHT-OF-WAY.

42. IT IS THE RESPONSIBILITY OF THE CONTRACTOR TO FURNISH ALL RESIDENTS AND BUSINESSES WITH AN INFORMATION FLYER ON ALL JOBS DURING CONSTRUCTION.

43. IF ANY GEOLOGIC OR MANMADE ENVIRONMENTAL FEATURE IS DISCOVERED DURING CONSTRUCTION, NOTIFY TEXAS COMMISSION ON ENVIRONMENTAL QUALITY (TCEQ) AND THE OWNER WITHIN 24 HOURS. THE CONTRACTOR IS REQUIRED TO PROVIDE COMPLIANCE DOCUMENTATION AS REQUIRED.

44. IF THE CONTRACTOR ENCOUNTERS ANY ARCHAEOLOGICAL DEPOSITS DURING CONSTRUCTION OPERATIONS. THE CONTRACTOR MUST STOP EXCAVATION IMMEDIATELY, CONTACT THE TEXAS HISTORICAL COMMISSION, CITY INSPECTOR, AND THE OWNER FOR AN ARCHAEOLOGICAL INVESTIGATION. THE CONTRACTOR CANNOT BEGIN EXCAVATION AGAIN WITHOUT WRITTEN PERMISSION FROM THE OWNER.

    IF MORE THAN THREE (3) DAYS ARE REQUIRED FOR INVESTIGATION (NOT INCLUDING HOLIDAYS AND WEEKENDS) AND IF THE CONTRACTOR IS UNABLE TO WORK IN OTHER AREAS, THEN THE CONTRACTOR WILL BE ALLOWED TO NEGOTIATE FOR ADDITIONAL CONSTRUCTION TIME UPON WRITTEN REQUEST WITHIN TEN (10) DAYS AFTER THE FIRST NOTICE TO THE OWNER.

    IF THE TIME REQUIRED FOR INVESTIGATION IS LESS THAN OR EQUAL TO THREE (3) DAYS FOR EACH EVENT, CONTRACT DURATION WILL NOT BE EXTENDED.

45. THE REVIEW OF THESE PLANS DOES NOT AUTHORIZE ACCESSORY PERMITS. THE CONTRACTOR IS RESPONSIBLE FOR COMPLETING THE FOLLOWING ACCESSORY PERMITS OR ACTIVITIES: (VERIFY WITH THE DEPARTMENT LISTED BELOW):
    - HIGH PILED COMBUSTIBLE STOCK (FIRE MARSHAL)
    - NEW FENCE (PERMIT CENTER)
    - BACKFLOW PREVENTION DEVICES (WASTEWATER)

UTILITY NOTES

1. CONTRACTOR SHALL NOTIFY ALL UTILITY COMPANIES PRIOR TO CONSTRUCTION TO DETERMINE THE LOCATION OF EXISTING UTILITIES. CONTRACTOR SHALL NOTIFY THE FOLLOWING AT LEAST 48 HOURS PRIOR TO EXCAVATION OPERATIONS AND SHALL ALSO BE RESPONSIBLE FOR CONTINUING REQUIRED COMMUNICATION TO EACH UTILITY (NUMBERS MAY ALTER -CONTRACTOR SHOULD VERIFY NUMBERS):
    - DIG TESS 800.344.8377
    - WIMBERLEY CITY HALL 512.847.0025
    - TXDOT 512.353.1061
    - CENTURY TELEPHONE 512.754.5223
    - AT&T 800.464.7928
    - GAS COMPANY 512.392.6672
    - TIME WARNER CABLE 512.805.2555
    - GRANDE 800.218.5725
    - PEDERNALES ELECTRIC 888.554.4732
    - BLUEBONNET ELECTRIC 800.949.4414
    - WIMBERLEY WATER SUPPLY CORPORATION* 512.847.2323

    * DEPARTMENTS ARE NOT INCLUDED WITH DIG TESS SERVICES.
    AFTER NOTIFICATION, CONTRACTOR MUST MAINTAIN ALL LOCATES AFFECTING THE PROJECT.

2. LOCATION AND DEPTHS OF EXISTING UTILITIES INCLUDING SERVICE LATERALS SHOWN ON THE PLANS ARE APPROXIMATE ONLY. ACTUAL LOCATIONS AND DEPTHS MUST BE FIELD VERIFIED BY THE CONTRACTOR AT LEAST 48 HOURS PRIOR TO CONSTRUCTION AND WELL IN ADVANCE OF WORK. IT SHALL BE THE CONTRACTOR'S RESPONSIBILITY TO LOCATE UTILITY SERVICE LINES AS REQUIRED FOR CONSTRUCTION AND TO PROTECT THEM AND MAINTAIN CONTINUAL SERVICE DURING CONSTRUCTION. ALL EXPOSED UTILITIES DURING EXCAVATION MUST BE SUPPORTED AND RESTRAINED, AS NECESSARY.

3. THRUSTS BLOCKS ARE NOT PERMITTED. ALL FITTINGS SHALL BE MECHANICALLY RESTRAINED. BELL JOINTS SHALL BE MECHANICALLY RESTRAINED IN ACCORDANCE WITH THE ENGINEER'S SPECIFICATIONS THAT ARE BASED ON SITE CONDITIONS. A JOINT RESTRAINT TABLE, SEALED BY THE ENGINEER, MUST BE USED.

4. ANY PORTION OF WORK, INCLUDING TRAFFIC CONTROL UTILITY PERMITTING, WHICH LIES IN TEXAS DEPARTMENT OF TRANSPORTATION (TXDOT), UPRR, OR COUNTY PROPERTY OR RIGHT-OF-WAY SHALL COMPLY WITH RESPECTIVE ENTITIES PERMITTING GUIDELINES. THE RESPECTIVE ENTITIES"INSPECTOR MUST BE NOTIFIED BEFORE WORK BEGINS.

5. CONFLICTS WITH THE PROPOSED WORK SHALL BE BROUGHT TO THE ATTENTION OF THE OWNER AND THE INSPECTOR IN WRITING IMMEDIATELY.

6. THE CONTRACTOR IS RESPONSIBLE FOR ANY AND ALL DAMAGES WHICH OCCUR DUE TO THE CONTRACTOR'S FAILURE TO LOCATE AND PRESERVE ANY AND ALL UTILITIES.

7. CONTRACTOR SHALL BE RESPONSIBLE FOR RELOCATING ANY CITY OF WIMBERLEY WATER AND WASTEWATER UTILITY LINES AND SERVICE TAPS WHERE REQUIRED. CONTRACTOR SHALL LOCATE ALL KNOWN UTILITIES +500"AHEAD OF WORK. ANY CONFLICT FROM A LOCATE LESS THAN 500" WILL NOT RESULT IN ADDITIONAL DAYS. CONTRACTOR SHALL BE RESPONSIBLE FOR THE COORDINATION AND ANY REQUIRED RELOCATION OF GAS, CABLE, TELEPHONE, OR ELECTRICAL LINES WITH THE APPROPRIATE UTILITY OWNER.

8. CONTRACTOR SHALL NOTIFY THE WIMBERLEY WATER CORPORATION 512.847.2323 AT LEAST TWO (2) WEEKS BEFORE CONNECTION WITH THE CITY WATER SYSTEM. CONTRACTOR SHALL NOTIFY THE CITY 512.847.0025 AT LEAST TWO (2) DAYS BEFORE CONNECTION WITH ANY ON-SITE SEWAGE FACILITIES.

9. A PERMIT FOR ANY WATER TIE-IN AND/OR SHUTOFF SHALL BE COORDINATED BY THE CONTRACTOR WITH THE WATER DEPARTMENT AND THE OWNER. CONTRACTOR SHALL NOTIFY ALL RESIDENTS WHO WILL BE AFFECTED BY A CITY SERVICE SHUT-OFF WITH HANDOUTS PROVIDED BY INSPECTOR OR WATER DEPARTMENT.

10. CONNECTION TO CUSTOMER SIDE OF WATER METER SHALL BE MADE USING BRASS PARTS. CONNECTION TO THE CUSTOMER SERVICE LINE SHALL BE MADE WITH SMITH BLAIR TYPE 411 STEEL DRESSER COUPLING OR APPROVED EQUIVALENT.

11. NO METER BOXES, VALVES OR OTHER OBSTRUCTIONS SHALL BE SET IN SIDEWALKS OR DRIVEWAYS. ANY METER BOXES OR VALVES SET IN SIDEWALKS OR DRIVEWAYS WILL BE RELOCATED AT CONTRACTOR'S EXPENSE. ALL METERS AND VALVES MUST BE LOCATED ON A PUBLIC RIGHT-OF-WAY OR EASEMENT.

12. THE CONTRACTOR WILL KEEP THE AREA ON TOP OF AND AROUND THE WATER METER BOX AND VALVES FREE OF ALL OBJECTS AND DEBRIS.

13. ALL VALVES IN A CITY RIGHT-OF-WAY WILL BE OPERATED BY CITY PERSONNEL ONLY. THE CONTRACTOR MAY NOT OPERATE ANY CITY OWNED VALVE. THE CONTRACTOR WILL BE FINED IF A WATER VALVE IS OPERATED WITHOUT EXPRESS WRITTEN CONSENT OF THE WATER UTILITY, REGARDLESS OF WHO OPERATED THE VALVE.

14. CONTRACTOR SHALL MAINTAIN A MINIMUM OF THREE (3) FEET OF COVER AT SUBGRADE OVER THE SANITARY SEWER LATERALS. ALL SEWER LATERAL SERVICES FOR FUTURE CONNECTIONS, AS IDENTIFIED ON PLAN AND PROFILES, SHALL BE CAPPED AND SEALED. THE CONTRACTOR SHALL BE RESPONSIBLE FOR DISCONNECTING EACH EXISTING SERVICE LINE FROM THE EXISTING MAIN AND RE-CONNECTING THE SERVICE TO THE NEW MAIN. THE CONTRACTOR SHALL BE RESPONSIBLE FOR MAINTAINING CONTINUOUS SERVICE (NO SEPARATE PAY ITEM). LATERALS SHALL BE CONSTRUCTED TO SERVE ALL EXISTING HOUSES AND VACANT LOTS.

15. THE CONTRACTOR SHALL BE RESPONSIBLE TO ENSURE THAT NO OVERFLOWS OR SPILLAGE OF SEWAGE OCCURS. SHOULD THIS OCCUR, THE CONTRACTOR SHALL IMMEDIATELY NOTIFY THE INSPECTOR, OWNER AND THE TEXAS COMMISSION ON ENVIRONMENTAL QUALITY (TCEQ,512.339.2929). THE CONTRACTOR SHALL ALSO IDENTIFY THE SOURCE OF THE SPILL AND ATTEMPT TO ELIMINATE ANY ADDITIONAL SPILLAGE, CONTAIN SPILLAGE IN PLACE TO PREVENT FURTHER CONTAMINATION, CLEAN UP THE SPILL, DISPOSE OF CONTAMINATED MATERIALS, AND DISINFECT THE AREA OF THE SPILL WITH A MIXTURE OF HTH CHLORINE AND WATER.

16. CONTRACTOR SHALL IDENTIFY AND TRAIN PERSONNEL IN ALL ASPECTS OF WORKING IN AREA OF SANITARY SEWAGE AND SHALL BE RESPONSIBLE FOR SPILLAGE PREVENTION AND CONTROL. SPILLAGE RELATED WORK IS AT NO ADDITIONAL COST TO THE CITY. ALL WORK SHALL BE DONE ACCORDING TO GUIDELINES SET BY THE TEXAS COMMISSION ON ENVIRONMENTAL QUALITY (TCEQ) AND THE CITY OF WIMBERLEY. THE INSPECTOR SHALL BE CONTINUALLY ADVISED UNTIL SITUATION IS RESOLVED.

17. THE CONTRACTOR SHALL PROVIDE BY-PASS PUMPING OF SEWAGE AROUND EACH SEGMENT OF PIPE TO BE REPLACED, IN ACCORDANCE WITH CITY OF AUSTIN SPECIFICATIONS. PAYMENT FOR SUCH WORK WILL BE SUBSIDIARY TO SANITARY SEWER MAIN INSTALLATION.

18. IF ELECTRIC OVERHEAD POWER LINES EXIST IN THE PROJECT AREA, TEXAS LAW ARTICLE 1436C, PROHIBITS ALL ACTIVITIES IN WHICH PERSONS OR EQUIPMENT MAY COME WITHIN SIX (6) FEET OF ENERGIZED OVERHEAD POWER LINES AND FEDERAL REGULATIONS, TITLE 29, PART 1910.180(I) AND PART 1926.550(A)(15) REQUIRE A MINIMUM OF TEN (10) FEET FROM THESE FACILITIES. WHERE CONTRACTOR MUST WORK NEAR OVERHEAD POWER LINES, CALL 1.877.372.0391 FOR THE LINES TO BE DE-ENERGIZED AND/OR MOVED AT CONTRACTOR'S EXPENSE.

19. ALL ACTIVE/IN-SERVICE VALVES, MANHOLES, AND OTHER APPURTENANCES MUST REMAIN ACCESSIBLE TO CITY CREWS AND RESPECTIVE UTILITIES AT ALL TIMES DURING CONSTRUCTION. ALL APPURTENANCES WITHIN THE PROJECT LIMITS SHALL BE RAISED TO FINAL GRADE.

21. ACCEPTED UTILITY LINE TYPES (VERIFY USE WITH OWNER)

PIPE MATERIAL	USE	PIPE SIZES	CLASSIFICATION
COPPER TUBING	SERVICE LINES	1"	TYPE K
PVC	SERVICE LINES	2"-3"	SCHEDULE 80
PVC	DISTRIBUTION, SERVICE LINES	4"-12"	C900 DR 14
DUCTILE IRON	FIRE HYDRANT LEAD, DISTRIBUTION	6"	C1158 CI 350
DUCTILE IRON	DISTRIBUTION LINE	8"-12"	C151 CI 350
DUCTILE IRON	TRANSMISSION LINE	16"-60"	C151 CI 250
PVC	TRANSMISSION LINE	16"-24"	C905 DR 18

22. ALL UTILITY LINES SHALL BE TESTED AFTER ALL APPURTENANCES SERVICES, (HYDRANTS, SAMPLING PORTS, VALVES, ETC.) ARE INSTALLED AND COMPLETE IN PLACE AND LOCATED AT FINAL GRADE. ALL UTILITY LINES SHALL BE TESTED FROM GATE VALVE TO GATE VALVE AT 200 PSI FOR 10 MINUTES AND @ 150 PSI FOR 2 HOURS. A FIRE LINE DEDICATED FOR A FIRE PROTECTION SYSTEM SHALL BE TESTED @ 200 PSI FOR 2 HOURS. ALL TESTING SHALL BE COMPLETE PRIOR TO TYING INTO EXISTING SYSTEM.

23. ALL BACTERIOLOGICAL SAMPLINGS MUST BE CERTIFIED WITHIN 20 DAYS OF PROJECT ACCEPTANCE. ON ALL TESTED AND PASSED WATER LINES THAT ARE DEAD END, OR NOT YET TIED INTO A WATER SYSTEM, AN AUTOMATIC FLUSH VALVE SHALL BE INSTALLED WITH AN APPROVED WATER METER.

24. FIRE HYDRANTS MUST BE PLACED OR MOVED TO FINISHED ELEVATION AFTER INSTALLATION. FINISHED ELEVATION IS 18"TO 24"FROM THE CENTER OF THE LOWEST CONNECTION TO THE ADJACENT GRADE.

25. FIRE HYDRANTS ARE REQUIRED TO BE MARKED WITH A BLUE REFLECTIVE MARKER IN THE ROADWAY 6"TO 10"OFF CENTER OF THE ROAD WAY TOWARDS THE HYDRANT. BLUE REFLECTIVE MARKER IS SUBSIDIARY TO THE FIRE HYDRANT BID ITEM.

26. FIRE HYDRANTS MUST BE OPERATIONAL PRIOR TO STORING OR RAISING COMBUSTIBLE MATERIAL ON JOB SITE.

27. THE TOPS OF THE VALVE STEMS SHALL BE AT LEAST 18"AND NO MORE THAN 36"BELOW FINISHED GRADE. NOTE: CITY OF SAN MARCOS DETAILS FOR GATE VALVE DETAIL.

28. ALL IRON PIPE AND FITTINGS TO BE WRAPPED WITH AT LEAST 8 MIL POLYETHYLENE WRAP.

29. STRAPS OR OTHER APPROVED METHOD TO BE USED TO TRANSPORT PIPES. CHAINS WILL NOT BE ALLOWED WHEN HANDLING PIPE.

30. ALL CONSTRUCTION WATER METERS SHALL BE OBTAINED FROM THE CITY OF SAN MARCOS WATER DEPARTMENT WITH THE APPROPRIATE FORM. TEMPORARY METERS MAY BE RELOCATED FROM ONE HYDRANT TO ANOTHER ONLY BY WATER/WASTEWATER PERSONNEL.

31. A FINE WILL BE IMPOSED ON CONTRACTORS USING FIRE HYDRANTS WITHOUT METERS, WITH UNAPPROVED METERS, OR FAILING TO USE APPROVED BACKFLOW PREVENTION DEVICES.

32. DISINFECTION SAMPLE PORTS SHALL BE INSTALLED AT PROPER LOCATIONS (NOT MORE THAN 1000 -FEET INTERVALS) ALONG WATER LINES.

EROSION CONTROL NOTES

1. CONTRACTOR SHALL EXECUTE ALL REQUIRED PROVISIONS OF THE STORM WATER POLLUTION PREVENTION AND EROSION CONTROL PLAN. ANY FINE RESULTING FROM FAILURE TO EXECUTE REQUIRED PROVISIONS WILL BE AT THE CONTRACTOR'S EXPENSE.

2. THE CONTRACTOR MUST HAVE A DESIGNATED PERSON RESPONSIBLE FOR MONITORING EROSION CONTROL MEASURES TO INSURE THAT ALL FEDERAL, STATE, AND LOCAL LAWS AND REGULATIONS ARE BEING COMPLIED WITH. THIS PERSON SHALL BE RESPONSIBLE FOR ALL REQUIRED FORMS AND DOCUMENTATION TO MEET REGULATIONS OF THE EPA, NPDES, AND TPDES GENERAL PERMIT.

3. IN THE EVENT OF UNUSUAL SITE CONDITIONS, OR WEATHER RELATED EVENTS, MORE STRINGENT REQUIREMENTS MAY BE REQUIRED (ON-SITE OR OFF) TO MAINTAIN EROSION CONTROL.

4. STORM DRAIN INLETS WITHIN 200 FOOT DOWNSTREAM OF ANY PERMITTED CONSTRUCTION AREA MUST BE PROTECTED PER DETAIL PROVIDED BY THE CITY.

5. ALL DISTURBED AREAS DURING CONSTRUCTION SHALL BE RESTORED WITH A MINIMUM OF FOUR (4) INCHES OF TOPSOIL AND SEEDING/SODDING. NO PAYMENT SHALL BE MADE FOR RESTORATION OUTSIDE THE LIMITS OF CONSTRUCTION.

TREE PROTECTION AND PRESERVATION GENERAL NOTES

1. THE CONTRACTOR IS RESPONSIBLE TO PROTECT PRESERVED TREES AGAINST INJURY OR DAMAGE, INCLUDING CUTTING, SOIL COMPACTION, AND BREAKING OR SKINNING OF ROOTS. THE CONTRACTOR SHALL COORDINATE WITH CITY INSPECTOR PRIOR TO ANY TRIMMING OR PRUNING. COORDINATION WITH A CERTIFIED ARBORIST MAY BE REQUIRED AND WILL NOT BE ADDITIONAL COST TO THE CITY.

2. THE CONTRACTOR WILL NOT OPERATE OR STORE EQUIPMENT, VEHICLES OR MATERIALS WITHIN THE ROOT PROTECTION ZONE OF ANY TREE WITHIN OR NEAR THE PROJECT.

3. AT

TREE PROTECTION (CONTINUED):

8. THE CONTRACTOR WILL REMOVE ALL TREES SIX (6) INCHES IN DIAMETER AND GREATER IDENTIFIED WITHIN THESE PLANS. PAYMENT FOR THEIR REMOVAL TO BE COVERED UNDER ITEM 101S, PREPARING RIGHT-OF-WAY. WHEN DIRECTED BY THE CITY, REMOVAL OF ADDITIONAL TREES, SIX (6) INCHES IN DIAMETER OR GREATER, NOT IDENTIFIED IN THESE PLANS, TO BE PAID FOR UNDER ITEM 101S, PREPARING RIGHT-OF-WAY. CITY INSPECTOR (512.847.0025) MUST APPROVE ANY TREE REMOVAL.

9. THE CONTRACTOR WILL PROTECT ALL EXISTING LANDSCAPE AND TREES FROM A CHANGE IN THE SOIL PH FACTOR BY PREVENTING THE DISPOSAL OF LIME BASED MATERIALS SUCH AS CONCRETE, PLASTER, OR LIME TREATMENT AT THE PAVEMENT SUBGRADE IN THE PROXIMITY OF PRESERVED TREE AREAS.

10. TREES DAMAGED OR LOST DUE TO THE CONTRACTOR'S NEGLIGENCE DURING CONSTRUCTION SHALL BE MITIGATED TO THE CITY'S SATISFACTION.

TRAFFIC NOTES AND SPECIAL CONDITIONS

1. IT IS THE CONTRACTOR'S SOLE RESPONSIBILITY TO SEE THAT ALL TRAFFIC CONTROL DEVICES ARE PROPERLY INSTALLED AND MAINTAINED AT THE JOB SITE IN ACCORDANCE WITH THE PLANS, SPECIFICATIONS AND RELATED INDUSTRY STANDARDS AND REGULATIONS. THESE PLANS DO NOT INCLUDE TRAFFIC CONTROL. THE CONTRACTOR SHALL SUBMIT A TRAFFIC CONTROL PLAN SEALED BY A PROFESSIONAL ENGINEER REGISTERED IN THE STATE OF TEXAS, INCLUDING A SIGN AND BARRICADE PLAN CONFORMING TO THE REQUIREMENTS OF THE TEXAS MANUAL ON UNIFORM TRAFFIC CONTROL DEVICES. THE CITY'S INSPECTOR WILL ONLY BE RESPONSIBLE TO INSPECT THE TRAFFIC CONTROL DEVICES BEING DEPLOYED. IF, IN THE OPINION OF THE CITY INSPECTOR, THE TRAFFIC CONTROL DEVICES DO NOT CONFORM TO ESTABLISHED STANDARDS OR ARE INCORRECTLY PLACED OR ARE INSUFFICIENT IN QUANTITY TO PROTECT THE GENERAL PUBLIC, THE CITY INSPECTOR SHALL HAVE THE OPTION TO STOP CONSTRUCTION OPERATION AT THE CONTRACTOR'S EXPENSE UNTIL SUCH TIME AS THE CONDITIONS ARE CORRECTED BY THE CONTRACTOR.

2. PRIOR TO STARTING CONSTRUCTION, THE CONTRACTOR SHALL PROVIDE THE CITY A TRAFFIC SIGN AND TRAFFIC SIGNAL INVENTORY. PRIOR TO COMPLETION OF THE CONTRACT AND REMOVAL OF THE BARRICADES, THE CONTRACTOR SHALL AGAIN CONTACT THE CITY FOR VERIFICATION OF CONDITION AND PLACEMENT OF ALL PERMANENT SIGNS. THE BARRICADES SHALL NOT BE REMOVED UNTIL ALL APPLICABLE PERMANENT TRAFFIC SIGNS AND SIGNALS ARE IN PLACE.

3. IT IS THE CONTRACTOR'S RESPONSIBILITY TO OBTAIN AND MAINTAIN TEMPORARY STOP SIGNS AND ALL OTHER TRAFFIC CONTROL DEVICES REQUIRED TO PROTECT THE GENERAL PUBLIC. IF THE CITY HAS REMOVED PERMANENT STOP SIGNS, THE CONTRACTOR SHALL REQUEST THAT THE SIGNS BE RETURNED TO THE CONSTRUCTION SITE TO BE REINSTALLED BY THE CONTRACTOR. ALL PERMANENT SIGNS OR TRAFFIC CONTROL DEVICES MISSING OR DAMAGED UPON COMPLETION OF CONSTRUCTION SHALL BE REPLACED AT THE CONTRACTOR'S EXPENSE.

4. AS WORK PROGRESSES, THE CONTRACTOR MAY BE REQUESTED TO ADJUST THE LOCATION OF TEMPORARY TRAFFIC CONTROL DEVICES, AS NECESSARY BY THE CITY AT CONTRACTOR'S EXPENSE. IF THE NEED ARISES, ADDITIONAL TEMPORARY TRAFFIC CONTROL DEVICES, SPECIAL DIRECTIONAL DEVICES, AND/OR BUSINESS NAME SIGNS MAY BE ORDERED BY THE PUBLIC SERVICES TRANSPORTATION DIVISION AT THE CONTRACTOR'S EXPENSE.

5. THE CONTRACTOR MUST MAINTAIN ALL STREETS WITHIN PROJECT LIMITS BY REPAIRING TRENCHES, POTHOLES, AND LEVELING UP WITH ASPHALT AT NO ADDITIONAL COST TO THE CITY. THE CONTRACTOR SHALL PROVIDE FOR ACCESS TO RESIDENCES AND ALL BUSINESSES AT ALL TIMES WITHIN ALL THE PHASES OF THE WORK. WHEN THE WORK REQUIRES THE EXCAVATION OF THE STREET AND THE REMOVAL OF THE EXISTING DRIVEWAY APPROACHES AND SIDEWALKS, THE CONTRACTOR SHALL BE RESPONSIBLE FOR PROVIDING TEMPORARY ALL-WEATHER ACCESS TO THE BUSINESSES AND RESIDENCES. THE TEMPORARY DRIVEWAY APPROACHES SHALL BE CONSTRUCTED WITH FLEXIBLE BASE OR GRAVEL MATERIAL AT NO SEPARATE COST TO THE CITY.

6. PERMANENT PAVEMENT MARKINGS SHALL BE APPLIED PRIOR TO THE OPENING OF THE COMPLETED STREET TO TRAFFIC. TEMPORARY ADDITIONAL SHORT-TERM EXPENDABLE PAVEMENT MARKINGS MAY BE REQUIRED.

7. ANY DAMAGE TO PERMANENT TRAFFIC SIGNALS, THE CONTROLLER BOX, LOOPS OR CONDUITS DURING OR UPON COMPLETION OF THE PROJECT SHALL BE REPAIRED OR REPLACED AT THE CONTRACTOR'S EXPENSE. THE DECISION TO REPAIR, AS OPPOSED TO REPLACE, THE DAMAGED EQUIPMENT SHALL BE MADE BY THE CITY.

8. THE CONTRACTOR IS RESPONSIBLE FOR REPAIRING ALL STREETS OUTSIDE OF THE PROJECT LIMITS WHICH ARE DAMAGED DUE TO CONSTRUCTION ACTIVITIES. THE REPLACED SECTION MUST BE APPROVED BY THE CITY AND THE OWNER.

9. OFF-DUTY POLICE OFFICERS MAY BE REQUIRED AT NO ADDITIONAL COST TO THE CITY.

10. THE CONTRACTOR SHALL PROVIDE THE CITY AN EMERGENCY TELEPHONE NUMBER FOR EVENINGS, WEEKENDS, AND HOLIDAYS BY THE FIRST WORKING DAY OF THE PROJECT.

11. ACCESSIBILITY REQUIREMENTS:

    A. PRIOR TO INITIATING THE CONSTRUCTION OF NEW DRIVEWAY APPROACHES, THE CONTRACTOR SHALL GIVE ADVANCE WARNING IN PERSON, OR IN WRITING, OF AT LEAST 48 HOURS TO EACH RESIDENCE THAT WILL BE IMMEDIATELY AFFECTED.

    B. FOR BUSINESSES WITH MORE THAN ONE DRIVEWAY, AT LEAST ONE DRIVEWAY SHALL REMAIN OPEN WHILE THE OTHER NEW DRIVEWAY APPROACHES ARE CONSTRUCTED. FOR BUSINESSES WITH ONLY ONE DRIVEWAY, THE NEW DRIVEWAY APPROACHES SHALL BE CONSTRUCTED IN HALF WIDTHS, UNLESS A TEMPORARY ASPHALT DRIVEWAY IS FIRST INSTALLED AT NO ADDITIONAL COST TO THE CITY.

    C. CONSTRUCTION OF A DRIVEWAY 20 FEET OR GREATER IN WIDTH MUST BE DONE ONE HALF AT A TIME TO ALLOW CONTINUOUS ACCESS TO THE PROPERTY.

    D. ALL SIDEWALKS AND DRIVEWAYS SHALL MEET APPLICABLE TAS STANDARD.

MATERIAL TESTING

TESTING SCHEDULE

DESCRIPTION:	*RATE:
SOILS:	
STANDARD PROCTOR - TRENCH BACKFILL	PER MATERIAL SOURCE
STANDARD PROCTOR - RAW SUBGRADE	PER MATERIAL SOURCE OR STREET
DENSITIES - TRENCH BACKFILL**	PER 250 LF PIPE PER LIFT
DENSITIES - CEMENT STABILIZER BACKFILL	PER 250 LF PIPE
DENSITIES - RAW SUBGRADE**	PER 100 LF STREET PER LIFT
DENSITIES - DRIVEWAYS	PER 5 DRIVEWAYS
BASE:	
SIEVE ANALYSIS	PER 300 LF STREET
ATTERBERGS LIMITS	PER 300 LF STREET
MODIFIED PROCTOR	PER MATERIAL CHANGE
DENSITIES OF COMPACTED BASE**	PER 300 LF STREET PER LIFT
WET BALL MILL TEST	PER MATERIAL SOURCE
TRIAXIAL TEST	PER MATERIAL SOURCE
HOT-MIX ASPHALT CONCRETE (HMAC):	
EXTRACTION, SIEVE ANALYSIS	PER 500 TONS OR DAY
LAB DENSITY & STABILITY	PER 500 TONS OR DAY
THEORETICAL DENSITY (RICE METHOD)	PER 500 TONS OR DAY
TEMPERATURE - DURING LAY-DOWN	CONTINUOUS AS NEEDED
THICKNESS - IN PLACE	PER 300 LF STREET
% AIR VOIDS - IN PLACE	PER 300 LF STREET
% THEORETICAL DENSITY - IN PLACE	PER 300 LF STREET
CONCRETE:	
(UNCONFINED COMPRESSION, 7, 14 & 28 DAY)	
CURB AND GUTTER	PER 1000 LF C&G
SIDEWALK	PER 4000 SF
DRIVEWAY	PER 2500 SF
CURB INLETS	PER 10 INLETS
AIR, SLUMP & COMPRESSION - IN PLACE	PER EXPOSED STRUCTURE
SLUMP & COMPRESSION - IN PLACE	PER UNDERGROUND STRUCTURE

* THE ABOVE TESTING RATES ARE ONLY ANTICIPATED GUIDELINES. THE CITY RESERVES THE RIGHT TO CONDUCT TESTING AT THE CITYS DISCRETION.

** TESTING MUST BE CONDUCTED DURING BACKFILL OPERATIONS.

SPECIAL NOTES:

1. CONTRACTOR TO COORDINATE EACH SERVICE LINE CONNECTION WITH THE CORRESPONDING PROPERTY OWNER.
   1.1. EXISTING ON-SITE SEWAGE FACILITIES (SEPTIC SYSTEMS) SHALL HAVE THE WASTEWATER REMOVED BY A WASTE TRANSPORTER, HOLDING A CURRENT REGISTRATION WITH THE TEXAS COMMISSION ON ENVIRONMENTAL QUALITY EXECUTIVE DIRECTOR.
   1.2. CORE DRILL 4" DRAIN HOLES IN BOTTOM OF SEPTIC SYSTEM STRUCTURE.
   1.3. EACH SEPTIC SYSTEM TO BE ABANDONED SHALL HAVE THE LID AND WALLS DEMOLISHED TO 5' BELOW GRADE.
   1.4. MISCELLANEOUS ON-SITE FILL AND DEBRIS CREATED FROM DEMOLITION (CRUSHED TO LESS THAN THREE INCHES IN DIAMETER) MAY BE USED TO FILL REMAINING STRUCTURE AND/OR PIT TO MATCH EXISTING GRADE.
   1.5. FILL SHALL BE FREE OF ORGANIC AND CONSTRUCTION DEBRIS, ACCORDING TO TEXAS ADMINISTRATIVE CODE SECTION 285.36.
2. CONTRACTOR TO COORDINATE LOCATION OF GRINDER PUMP STATIONS WITH THE CORRESPONDING PROPERTY OWNER (ONLY APPLIES TO SERVICE CONNECTIONS ON BLUE HOLE LANE).
3. SERVICE CONNECTIONS WILL BE PAID ACCORDING TO THE FOLLOWING BID ITEMS AND DESCRIPTIONS:
   3.1. SHORT SERVICE CONNECTION - 1 TO 100 LINEAR FEET
   3.2. MEDIUM SERVICE CONNECTION - 101 TO 300 LINEAR FEET
   3.3. LONG SERVICE CONNECTION - 301 TO 500 LINEAR FEET
   3.4. SERVICE CONNECTIONS LONGER THAN 500 FEET WILL BE PAID PER LINEAR FOOT AS A SEPARATE BID ITEM.
4. THIS PROJECT IS SUBJECT TO THE AMERICAN IRON AND STEEL (AIS) REQUIREMENTS OF 33 U.S.C §1388 FOR CLEAN WATER STATE REVOLVING FUND PROJECTS OR PUBLIC LAW 114-113, CONSOLIDATED APPROPRIATIONS ACT, 2016, OR SUBSEQUENT APPROPRIATIONS ACTS, FOR DRINKING WATER STATE REVOLVING FUND PROJECTS. ANY CONTRACT OR CONTRACTS AWARDED UNDER THIS INVITATION FOR BIDS ARE SUBJECT TO THE AIS REQUIREMENTS OF THESE LAWS. MONTHLY COMPLIANCE WITH AIS WILL BE VERIFIED BY THE OWNER THROUGH THE SUBMITTAL OF THE TWDB FORM TWDB-1106-A.
5. ALL COLLECTION SYSTEM PIPES AND MANHOLES INSTALLED ARE SUBJECT TO THE SEPARATION DISTANCES AND PROTECTION REQUIREMENTS LISTED IN THE TEXAS COMMISSION ON ENVIRONMENTAL QUALITY, CHAPTER 217 - DESIGN CRITERIA FOR DOMESTIC WASTEWATER SYSTEMS, PARAGRAPH 217.53 (D) SEPARATION DISTANCES.
6. IF ARCHAEOLOGICAL MATERIALS ARE ENCOUNTER ARE ENCOUNTERED DURING CONSTRUCTION, THE PROCEDURES CODIFIED AT 33 CFR 800.13(b) WILL APPLY AND THE RECIPIENT SHALL CONTACT THE ECONOMIC DEVELOPMENT ADMINISTRATION AND THE TEXAS STATE HISTORIC PRESERVATION OFFICE. ARCHEOLOGICAL MATERIAL CONSIST OF ANY ITEMS, FIFTY YEARS OR OLDER WHICH WERE MADE OR USED BY MAN. THESE ITEMS INCLUDE, BUT ARE NOT LIMITED TO, STONE PROJECTILE POINTS (ARROWHEADS), CERAMIC SHARDS, BRICKS, WORKED WOOD, BONE AND STONE, METAL OR GLASS OBJECTS, AND HUMAN SKELETAL REMAINS.
7. THE ECONOMIC DEVELOPMENT ADMINISTRATION SIGN SPECIFICATIONS AND STANDARD DETAILS CAN BE FOUND IN THE PROJECT MANUAL IN THE DOCUMENT TITLED "EDA SITE SIGN SPECIFICATIONS."

SEQUENCE OF CONSTRUCTION:

1. CONSTRUCT WASTE WATER TREATMENT PLANT.
2. CONSTRUCT GRAVITY COLLECTION SYSTEM.
3. CONSTRUCT FORCE MAIN.
4. CONSTRUCT RANCH ROAD PUMP STATION.
5. CONNECT EXISTING BLUE HOLE PUMP STATION TO NEW FORCE MAIN.
6. INSTALL SERVICE CONNECTIONS TO GRAVITY COLLECTION SYSTEM AND ABANDON SEPTIC SYSTEMS PER SPECIAL NOTES.
7. INSTALL GRINDER PUMP STATIONS TO NEW FORCE MAIN.
8. INSTALL RECLAIMED WATERLINE.
9. COMPLETE THE PROJECT, ENTER THE WARRANTY PERIOD.

SURVEY CONTROL POINTS (NAD83/HARN)(GRID-FEET)

PNT NO.	NORTHING	EASTING	ELEV.	DESCRIPTION
1	13909392.53	2252652.63	819.36	80D NAIL
2	13908284.88	2253714.68	913.59	80D NAIL
3	13907608.37	2255003.96	911.78	80D NAIL
4	13911240.69	2253873.81	849.76	80D NAIL
5	13911513.95	2256192.45	877.80	80D NAIL
6	13909064.47	2256463.54	857.47	80D NAIL
8	13913764.38	2257574.04	904.93	80D NAIL
9	13912462.89	2258918.00	923.42	80D NAIL
10	13917803.25	2257954.85	963.35	80D NAIL
11	13915507.32	2258795.18	951.08	80D NAIL
12	13914885.05	2260521.81	1036.51	80D NAIL
13	13908320.20	2257055.97	860.79	TXDOT BRASS DISK N1067381
14	13913080.36	2256205.19	859.21	MAG NAIL
20	13910910.45	2254601.93	854.64	80D NAIL
21	13910827.07	2255019.64	858.70	MAG NAIL
22	13910596.06	2255528.57	867.77	MAG NAIL
23	13910316.71	2256308.26	844.12	80D NAIL
24	13911322.19	2256472.58	869.87	80D NAIL
25	13911502.54	2256200.89	877.48	80D NAIL
26	13911213.20	2255488.05	874.69	80D NAIL
27	13911093.61	2254836.38	853.82	MAG NAIL
28	13910662.59	2254353.83	852.87	MAG NAIL
29	13910123.54	2254806.63	850.60	MAG NAIL
31	13910534.42	2255315.53	862.93	60D NAIL
32	13909749.70	2254369.08	840.66	60D NAIL
33	13910750.00	2255640.07	869.53	60D NAIL
34	13910109.61	2254467.00	847.73	60D NAIL
35	13909834.12	2256098.76	832.69	60D NAIL
36	13909659.64	2255728.14	833.17	60D NAIL
37	13912014.45	2256493.43	879.20	MAG NAIL
38	13912576.78	2256592.71	882.40	60D NAIL
39	13912588.79	2256674.15	883.11	60D NAIL
40	13912152.44	2256758.77	869.00	60D NAIL
41	13911729.49	2256708.02	869.72	60D NAIL
42	13911963.39	2256766.25	871.03	MAG NAIL
43	13910998.08	2254265.52	840.88	60D NAIL
44	13910848.84	2254129.15	840.84	MAG NAIL
45	13910800.85	2254163.42	844.62	MAG NAIL
46	13910922.68	2254333.70	845.80	MAG NAIL
47	13911087.05	2254104.30	829.05	60D NAIL
48	13911214.57	2254552.29	833.80	60D NAIL
49	13911157.96	2254738.03	847.35	60D NAIL
50	13909506.66	2254834.58	836.67	60D NAIL
51	13909588.18	2254716.05	839.67	MAG NAIL
52	13909979.75	2256231.26	834.39	60D NAIL
53	13910105.77	2256484.34	833.53	60D NAIL
54	13910105.12	2256688.95	831.22	60D NAIL
55	13909491.39	2255140.35	838.46	MAG NAIL
56	13909551.67	2255481.16	834.81	MAG NAIL
57	13909559.34	2255058.02	838.73	60D NAIL

1. SURVEY INFORMATION WAS PROVIDED BY MACIAS & ASSOCIATES, L.P., 5410 SOUTH 1ST STREET, AUSTIN TX 78745. THE SURVEY WAS PERFORMED IN NOVEMBER OF 2014. ALL COORDINATES ARE STATE PLANE COORDINATES.
2. CONTRACTOR SHALL FIELD VERIFY ALL ELEVATIONS THAT MAY AFFECT THE WORK. ALL ELEVATION CALLOUTS ARE ELEVATIONS ABOVE MEAN SEA LEVEL.
3. INFORMATION PROVIDED ON THESE PLANS MAY OR MAY NOT SHOW ALL CURRENTLY EXISTING STRUCTURES AND UTILITIES ABOVE OR BELOW GROUND. THE SURVEY INFORMATION DOES NOT INCLUDE THE LOCATION OF ALL EXISTING TREES. THE CONTRACTOR SHALL BE RESPONSIBLE FOR VISITING THE ENTIRE PROJECT SITE PRIOR TO SUBMITTING A BID.

TxDOT NOTES

1. THE CONTRACTOR IS TO CONTRACT ONE OF THE FOLLOWING FOR UTILITY LOCATIONS PRIOR TO ANY WORK IN TxDOT ROW:

   TEXAS EXCAVATION SAFETY SYSTEMS (TESS) 1-800-245-4545
   TEXAS ONE CALL SYSTEM (TOCS) 1-800-344-8377

2. OWNER CONTACT INFORMATION:

   WIMBERLEY WATER SUPPLY CORPORATION
   110 LA PAIS STREET
   P.O. BOX 10
   WIMBERLEY, TX 78676

   FIELD OPERATIONS MANAGER
   GARRETT ALLEN
   CELL # 512-677-8118
   OFFICE # 512-847-2323

3. CONTRACTOR TO GIVE NOTICE TO TxDOT PRIOR TO COMMENCEMENT OF WORK. CONTRACTOR TO MAKE CERTAIN THAT TxDOT CONSTRUCTION PERMIT HAS BEEN OBTAINED PRIOR TO COMMENCEMENT OF WORK.
4. LONE CLOSURES WILL BE ALLOWED ONLY WITH WRITTEN PERMISSION OF THE AREA ENGINEER.
5. LANE CLOSURES ARE NOT ALLOWED IN INCLEMENT WEATHER OR IF THE PAVEMENT IS WET OR ICY.
6. THE CONTRACTOR MUST CONTACT TxDOT 48 HOURS PRIOR TO WORKING IN THE ROW. THE CONTACT PERSONS NAME AND PHONE NUMBER IS SHOWN ON THE APPROVED UTILITY PERMIT REQUEST FORM.
7. THE UTILITY COMPANY OR ITS CONTRACTOR WILL BE HELD RESPONSIBLE FOR KEEPING THE SITE ROADWAY FREE OF MUD, ROCKS AND GENERAL DEBRIS.
8. CONSTRUCTION EQUIPMENT LEFT OVERNIGHT IN THE ROW MUST BE SECTIONED OFF WITH ORANGE PLASTIC MESH FENCING, AND BE PLACED AT LEAST 30 FEE OFF THE EDGE OF PAVEMENT. EQUIPMENT LOCATED CLOSER THAN 30 FEET MUST BE PROTECTED BY CONCRETE BARRIERS.
9. FIELD CREWS WILL NOT BE ALLOWED TO PARK THEIR VEHICLES WITHIN THE STATE ROW.
10. BORE PITS CLOSER THAN 30 FEET FROM THE EDGE OF PAVEMENT MUST BE PROTECTED BY CONCRETE TRAFFIC BARRIERS (CTB). OPEN PITS MUST BE SEALED OFF BY ORANGE PLASTIC MESH FENCING, CONES AND DRUMS.
11. ALL ASPHALT AND CONCRETE DRIVEWAYS LOCATED WITHIN THE STATE ROW MUST BE BORED. AN EXCEPTION TO THIS RULE WILL BE ALLOWED ONLY IF THE OWNER OF THE DRIVEWAY IS WILLING TO PROVIDE TxDOT A LETTER GRANTING THE CONTRACTOR PERMISSION TO OPEN CUT THEIR DRIVEWAY. THE LETTER MUST BE SIGNED AND REFLECT THE PROPERTY OWNERS NAME, ADDRESS AND PHONE NUMBER. TxDOT MAY CONTACT THE OWNER TO VERIFY THE LETTER'S ACCURACY.
12. TRAFFIC CONTROL MUST CONFORM TO TxDOT REQUIREMENTS AND RECOMMENDATIONS AND SHOULD MEET OR EXCEED THE TEXAS MANUAL ON UNIFORM TRAFFIC CONTROL DEVICES (TXMUTCD).
13. THE UTILITY COMPANY AND / OR ITS CONTRACTOR MUST LOCATE EXISTING UTILITY LINES PRIOR TO DOING ANY GROUND WORK LIKE BORING, DIGGING, TRENCHING, OR DRILLING WITHIN THE ROW.
14. THE CONTRACTOR SHALL REVEGETATE THE PROJECT AREA AS INDICATED UNDER THE TxDOT "REVEGETATION SPECIAL PROVISIONS."
15. TREES WITH A TRUNK DIAMETER OF 6 INCHES OR MORE THAT TxDOT DETERMINES TO BE OF ENVIRONMENTAL AND AESTHETIC VALUE WILL HAVE TO BE BORED FROM DRIPLINE TO DRIPLINE.

ALAN PLUMMER ASSOCIATES, INC.
ENVIRONMENTAL ENGINEERS AND SCIENTISTS
6300 LA CALMA DRIVE, SUITE 400
AUSTIN, TEXAS 78752-3843
PHONE 512-452-5905 FAX 512-452-2325
TEXAS REGISTERED ENGINEERING FIRM F-13

NO.	DATE	REVISION	BY

CITY OF WIMBERLEY
221 Stillwater
Wimberley, TX 78676

CITY OF WIMBERLEY
WASTEWATER TREATMENT PLANT AND COLLECTION SYSTEM PROJECT

GENERAL
GENERAL NOTES II

STATE OF TEXAS
STEPHEN J. COONAN
65516
LICENSED PROFESSIONAL ENGINEER
03/06/17

BAR IS ONE INCH ON ORIGINAL DRAWING.
ONE INCH

DESIGNED D. FRANKI
DRAWN B. DICKMAN
CHECKED C. SYVARTH
REVIEWED S. COONAN

Seq. of

Dwg. No. G-003

1732-002-01

PRINTED: 3/7/2017 9:44 AM m:\Projects\1732\002-01\Acad\sheetfiles\G-003.dwg SAVED: 3/7/2017 9:28 AM USER: Syvarth,Cynthia

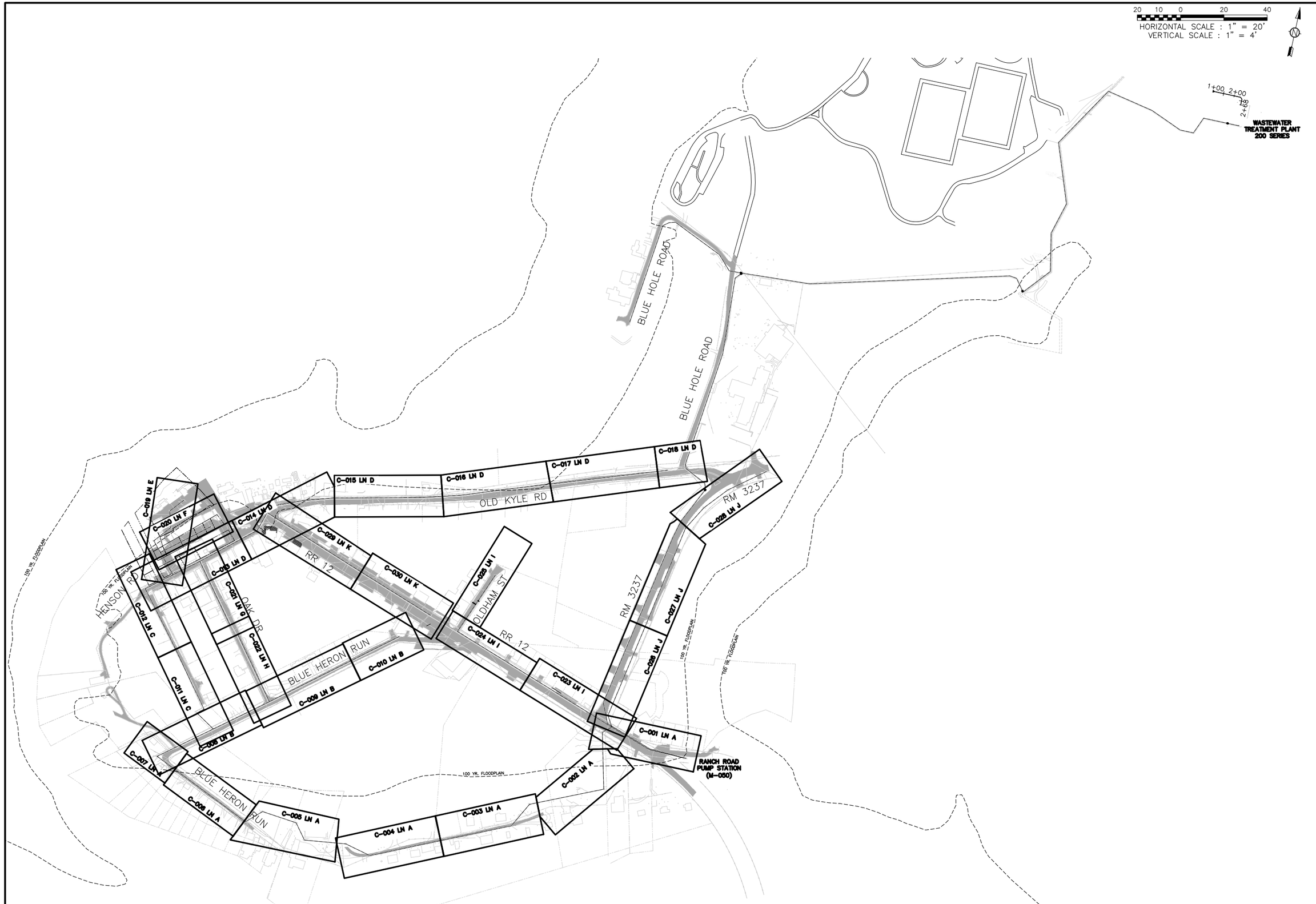

ALAN PLUMMER ASSOCIATES, INC.
ENVIRONMENTAL ENGINEERS AND SCIENTISTS
6300 LA CALMA DRIVE, SUITE 400
AUSTIN, TEXAS 78752-3843
PHONE: 512-452-5905 FAX: 512-452-2325
TEXAS REGISTERED ENGINEERING FIRM F-13

NO.	DATE	REVISION	BY

CITY OF WIMBERLEY
221 Stillwater
Wimberley, TX 78676

CITY OF WIMBERLEY
WASTEWATER TREATMENT PLANT AND COLLECTION SYSTEM PROJECT

GENERAL
GRAVITY LINE SITE PLAN

STATE OF TEXAS
STEPHEN J. COONAN
65516
LICENSED PROFESSIONAL ENGINEER
12/15/16

BAR IS ONE INCH ON ORIGINAL DRAWING.
ONE INCH

DESIGNED D. FRANKI
DRAWN B. DICKMAN
CHECKED C. SYVARTH
REVIEWED S. COONAN

Seq. of

Dwg. No. G-004

1732-002-01

PRINTED: 12/14/2016 5:05 PM M:\Projects\1732\002-01\Acad\SHEETFILES\G-004.dwg SAVED: 12/13/2016 8:22 AM USER: Dickman, Brian

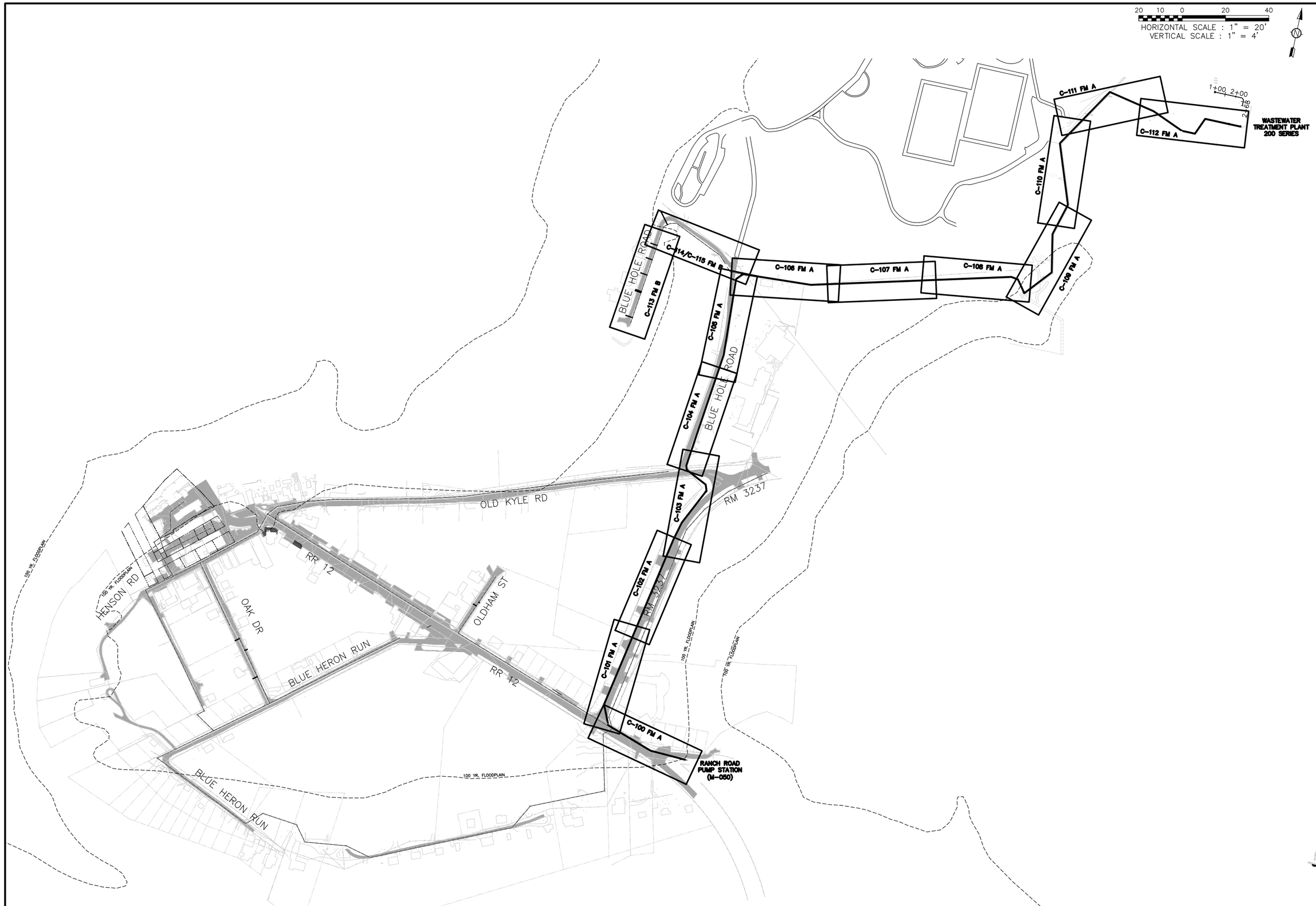

ALAN PLUMMER ASSOCIATES, INC.
ENVIRONMENTAL ENGINEERS AND SCIENTISTS
6300 LA CALMA DRIVE, SUITE 400
AUSTIN, TEXAS 78752-3843
PHONE: 512-452-5905 FAX: 512-452-2325
TEXAS REGISTERED ENGINEERING FIRM F-13

NO.	DATE	REVISION	BY

CITY OF WIMBERLEY
221 Stillwater
Wimberley, TX 78676

CITY OF WIMBERLEY
WASTEWATER TREATMENT PLANT AND COLLECTION SYSTEM PROJECT

GENERAL
FORCE MAIN SITE PLAN

STATE OF TEXAS
STEPHEN J. COONAN
65516
LICENSED PROFESSIONAL ENGINEER
12/15/16

BAR IS ONE INCH ON ORIGINAL DRAWING.
ONE INCH

DESIGNED D. FRANKI
DRAWN B. DICKMAN
CHECKED C. SYVARTH
REVIEWED S. COONAN

Seq. of

Dwg. No. G-005

1732-002-01

PRINTED: 12/14/2016 5:06 PM M:\Projects\1732\002-01\Acad\SHEETFILES\G-005.dwg SAVED: 12/13/2016 9:49 AM USER: Dickman, Brian

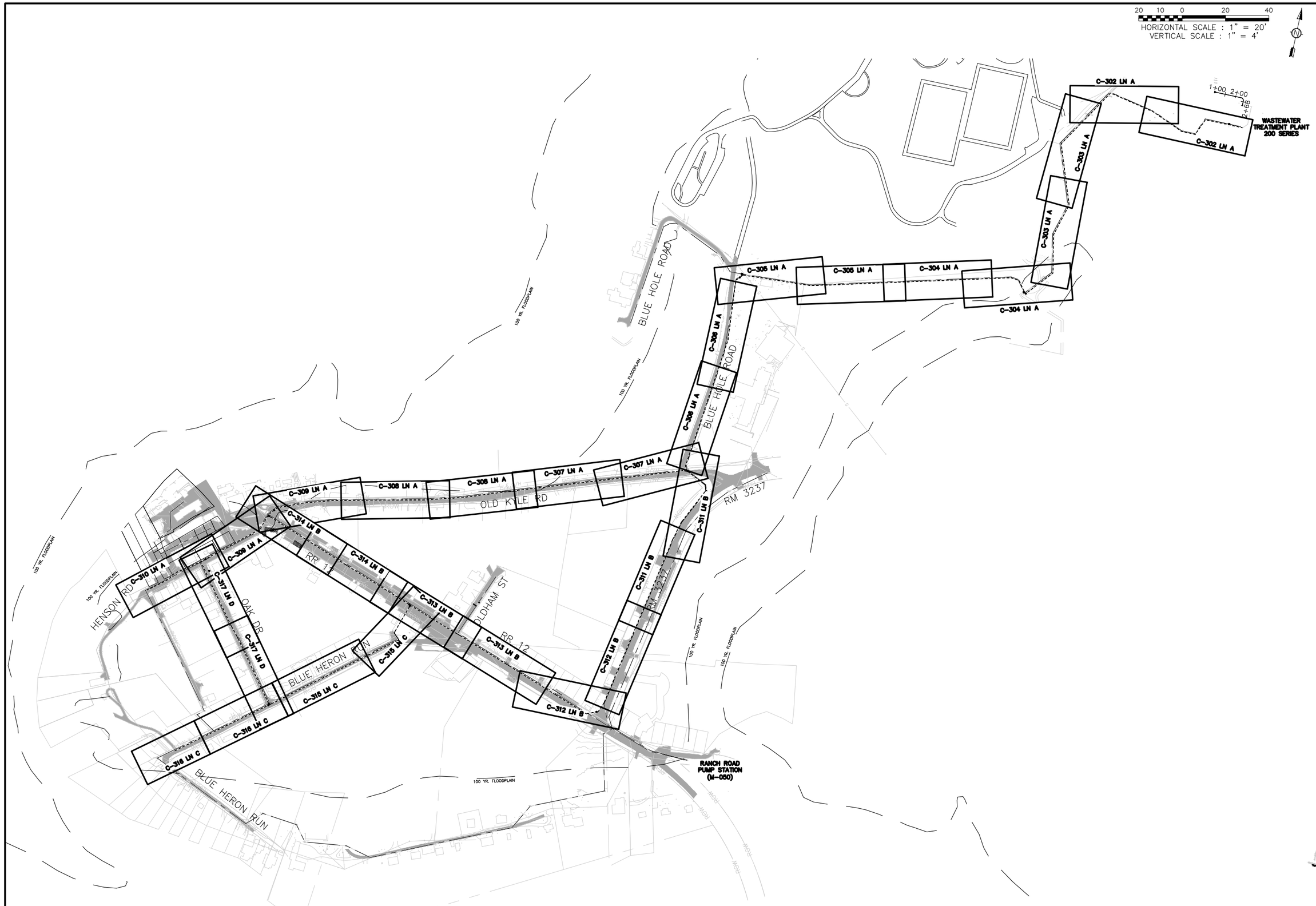

ALAN PLUMMER ASSOCIATES, INC.
ENVIRONMENTAL ENGINEERS AND SCIENTISTS
6300 LA CALMA DRIVE, SUITE 400
AUSTIN, TEXAS 78752-3843
PHONE: 512-452-5905 FAX: 512-452-2325
TEXAS REGISTERED ENGINEERING FIRM F-13

NO.	DATE	REVISION	BY

CITY OF WIMBERLEY
221 Stillwater
Wimberley, TX 78676

CITY OF WIMBERLEY
WASTEWATER TREATMENT PLANT AND COLLECTION SYSTEM PROJECT

GENERAL
RECLAIMED WATER SITE PLAN

STATE OF TEXAS
STEPHEN J. COONAN
65516
LICENSED PROFESSIONAL ENGINEER
12/15/16

BAR IS ONE INCH ON ORIGINAL DRAWING.
ONE INCH

DESIGNED D. FRANKI
DRAWN B. DICKMAN
CHECKED C. SYVARTH
REVIEWED S. COONAN

Seq. of

Dwg. No. G-006

1732-002-01

PRINTED: 12/14/2016 5:08 PM M:\Projects\1732\002-01\Acad\SHEETFILES\G-006.dwg SAVED: 12/13/2016 10:17 AM USER: Dickman, Brian

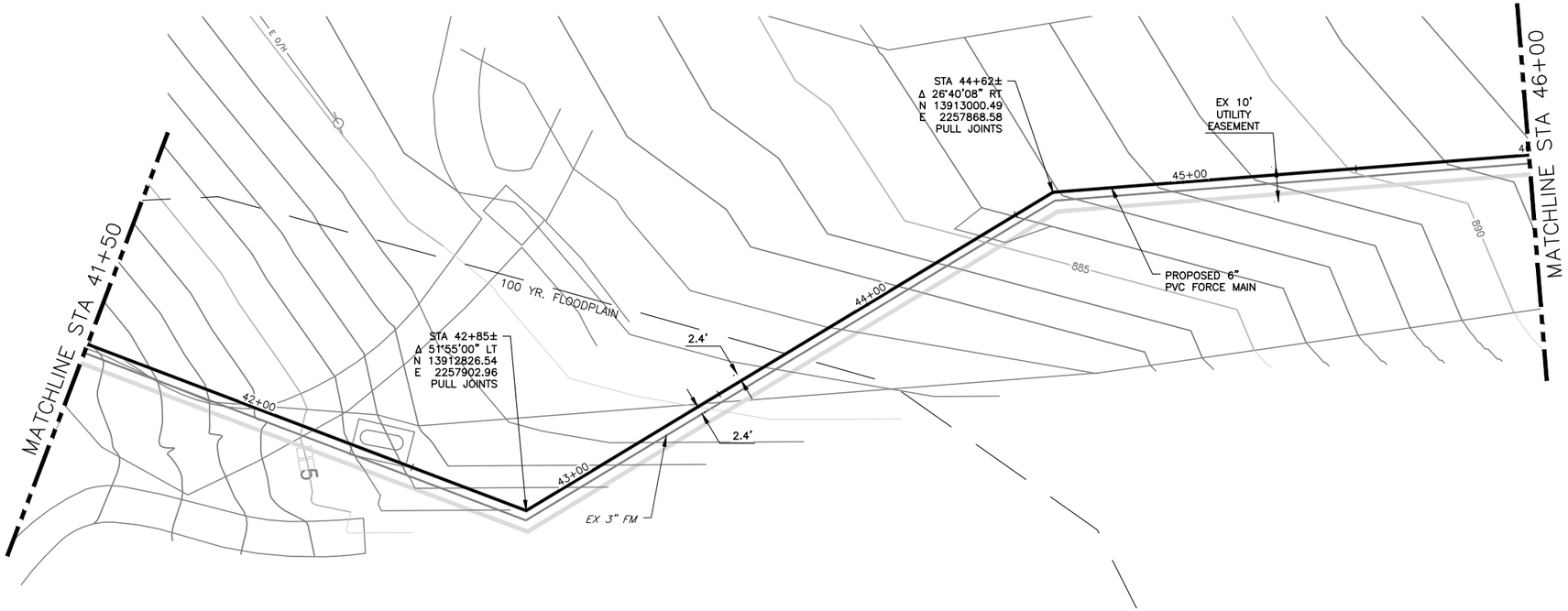

20 10 0 20 40

HORIZONTAL SCALE : 1" = 20'
VERTICAL SCALE : 1" = 4'

NOTES:

1. REFER TO DRAWING C-100 FOR ADDITIONAL NOTES.

ALAN PLUMMER ASSOCIATES, INC.
ENVIRONMENTAL ENGINEERS AND SCIENTISTS
6300 LA CALMA DRIVE, SUITE 400
AUSTIN, TEXAS 78752-3843
PHONE: 512-452-5905 FAX: 512-452-2325
TEXAS REGISTERED ENGINEERING FIRM F-13

NO.	DATE	REVISION	BY

CITY OF WIMBERLEY
221 Stillwater
Wimberley, TX 78676

CITY OF WIMBERLEY
WASTEWATER TREATMENT PLANT AND COLLECTION SYSTEM PROJECT

FORCE MAIN PLAN AND PROFILE
LN A STA 41+50 TO STA 46+00

STATE OF TEXAS
STEPHEN J. COONAN
65516
LICENSED PROFESSIONAL ENGINEER
12/15/16

BAR IS ONE INCH ON ORIGINAL DRAWING.
ONE INCH

DESIGNED C. SYVARTH
DRAWN B. DICKMAN
CHECKED D. FRANKI
REVIEWED S. COONAN

Seq. of

Dwg. No. C-109

1732-002-01

PRINTED: 12/14/2016 6:15 PM M:\Projects\1732\002-01\Acad\SHEETFILES\C-109 FM LN A.dwg SAVED: 12/13/2016 2:45 PM USER: Dickman, Brian

HORIZONTAL SCALE : 1" = 20'
VERTICAL SCALE : 1" = 4'

NOTES:

1. REFER TO DRAWING C-100 FOR ADDITIONAL NOTES.

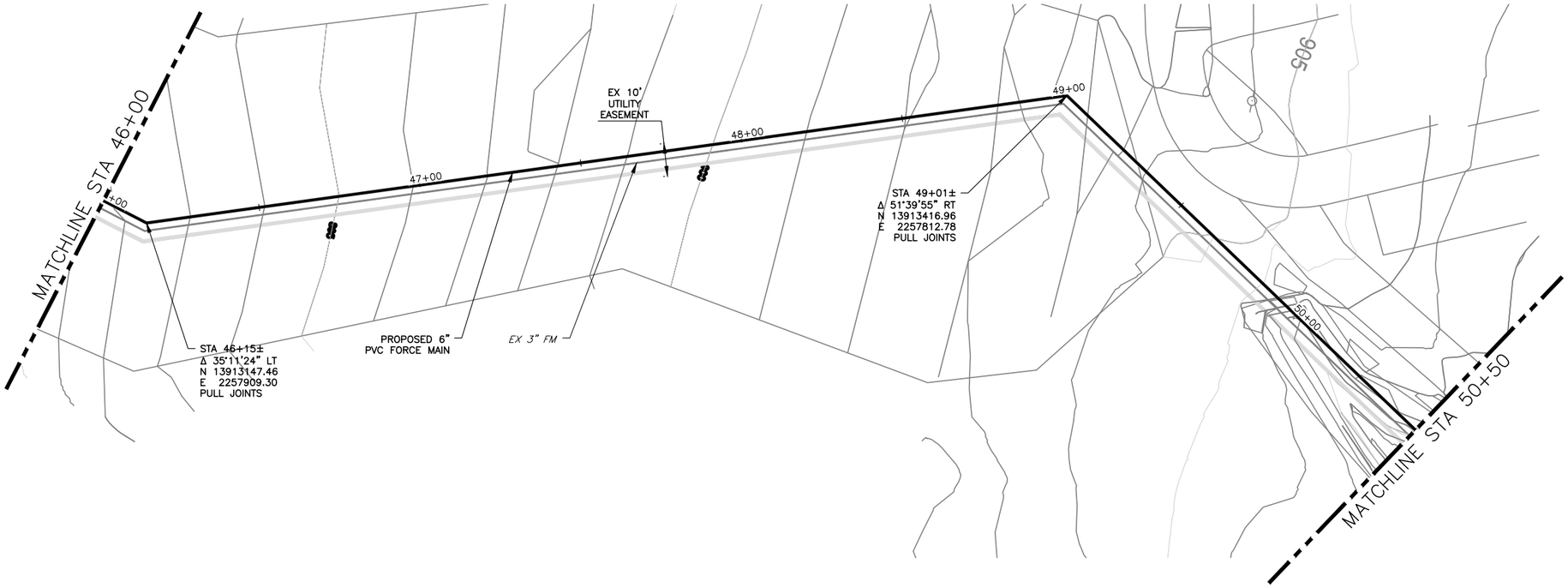

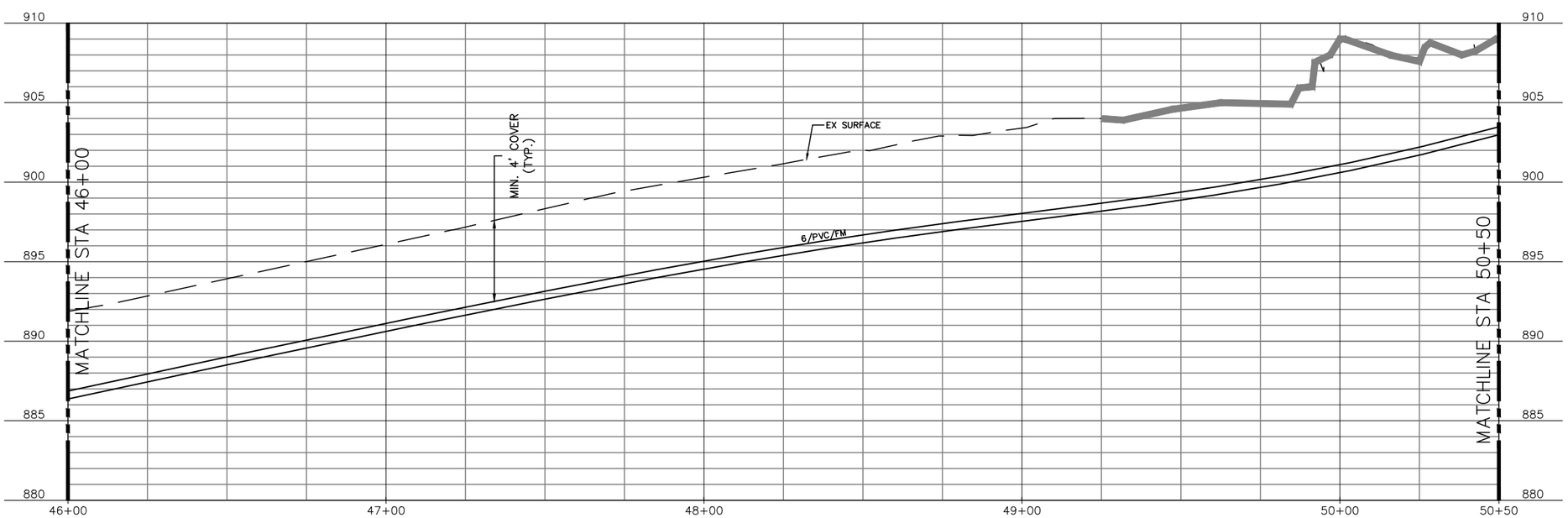

ALAN PLUMMER ASSOCIATES, INC.
ENVIRONMENTAL ENGINEERS AND SCIENTISTS
6300 LA CALMA DRIVE, SUITE 400
AUSTIN, TEXAS 78752-3843
PHONE: 512-452-5905 FAX: 512-452-2325
TEXAS REGISTERED ENGINEERING FIRM F-13

NO.	DATE	REVISION	BY

CITY OF WIMBERLEY
221 Stillwater
Wimberley, TX 78676

CITY OF WIMBERLEY
WASTEWATER TREATMENT PLANT AND COLLECTION SYSTEM PROJECT

FORCE MAIN PLAN AND PROFILE
LN A STA 46+00 TO STA 50+50

STATE OF TEXAS
STEPHEN J. COONAN
65516
LICENSED PROFESSIONAL ENGINEER
12/15/16

BAR IS ONE INCH ON ORIGINAL DRAWING.
ONE INCH

DESIGNED C. SYVARTH
DRAWN B. DICKMAN
CHECKED D. FRANKI
REVIEWED S. COONAN

Seq. of

Dwg. No. C-110

1732-002-01

PRINTED: 12/14/2016 6:17 PM M:\Projects\1732\002-01\Acad\SHEETFILES\C-110 FM LN A.dwg SAVED: 9/15/2016 5:29 PM USER: Dickman, Brian

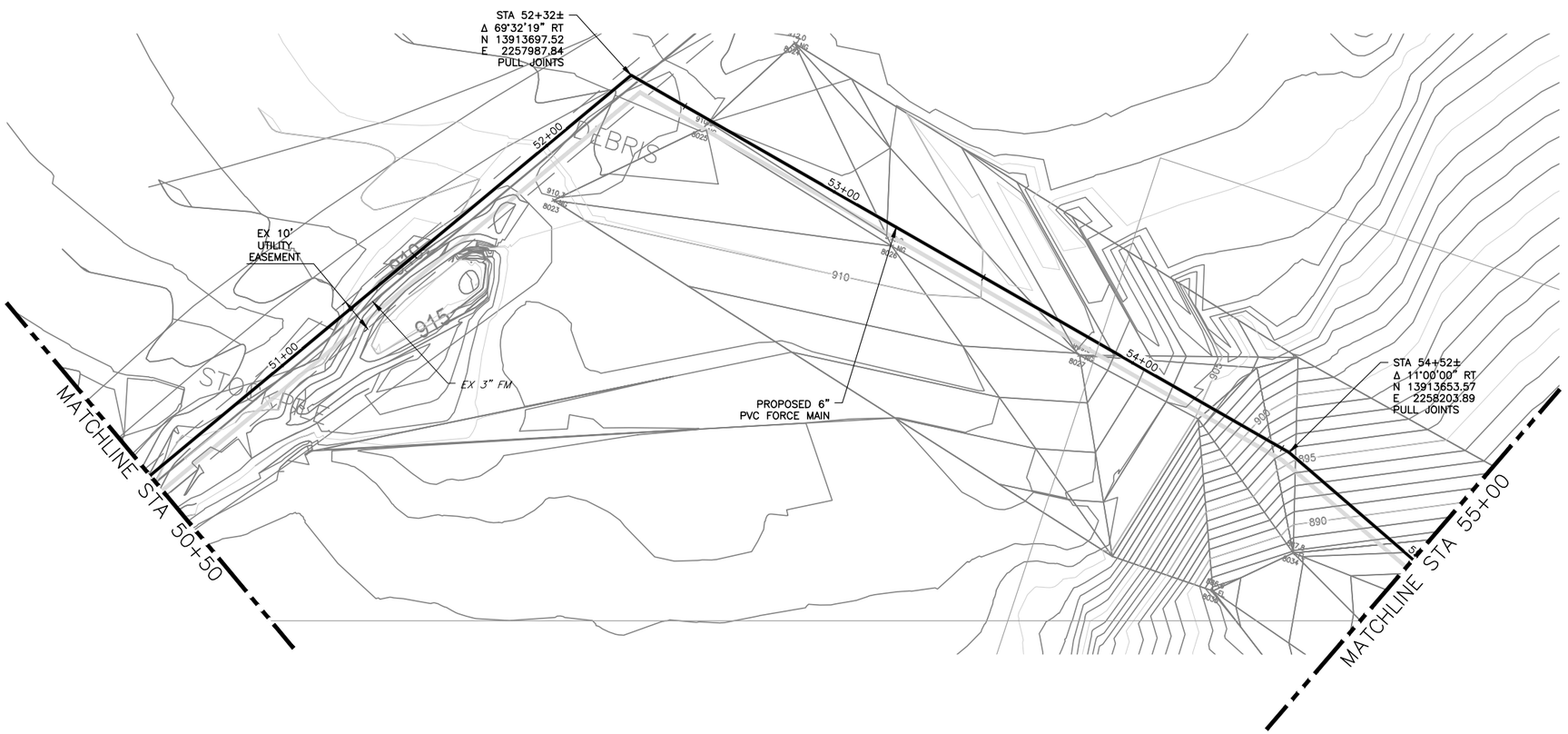

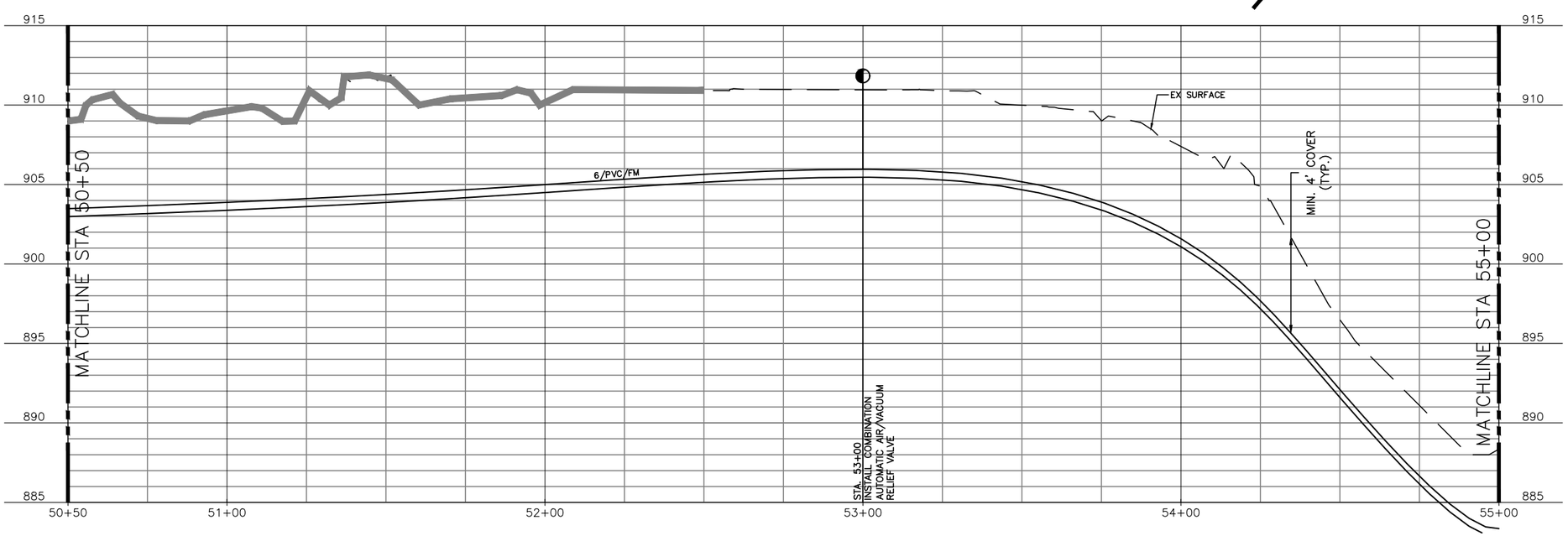

20 10 0 20 40

HORIZONTAL SCALE : 1" = 20'
VERTICAL SCALE : 1" = 4'

NOTES:

1. REFER TO DRAWING C-100 FOR ADDITIONAL NOTES.

ALAN PLUMMER ASSOCIATES, INC.
ENVIRONMENTAL ENGINEERS AND SCIENTISTS
6300 LA CALMA DRIVE, SUITE 400
AUSTIN, TEXAS 78752-3843
PHONE: 512-452-5905 FAX: 512-452-2325
TEXAS REGISTERED ENGINEERING FIRM F-13

NO.	DATE	REVISION	BY

CITY OF WIMBERLEY
221 Stillwater
Wimberley, TX 78676

CITY OF WIMBERLEY
WASTEWATER TREATMENT PLANT AND COLLECTION SYSTEM PROJECT

FORCE MAIN PLAN AND PROFILE
LN A STA 50+50 TO STA 55+00

STATE OF TEXAS
STEPHEN J. COONAN
65516
LICENSED PROFESSIONAL ENGINEER
12/15/16

BAR IS ONE INCH ON ORIGINAL DRAWING.
ONE INCH

DESIGNED C. SYVARTH
DRAWN B. DICKMAN
CHECKED D. FRANKI
REVIEWED S. COONAN

Seq. of

Dwg. No. C-111

1732-002-01

PRINTED: 12/14/2016 6:19 PM M:\Projects\1732\002-01\Acad\SHEETFILES\C-111 FM LN A.dwg SAVED: 9/15/2016 5:30 PM USER: Dickman, Brian

HORIZONTAL SCALE : 1" = 20'
VERTICAL SCALE : 1" = 4'

NOTES:

1. REFER TO DRAWING C-100 FOR ADDITIONAL NOTES.

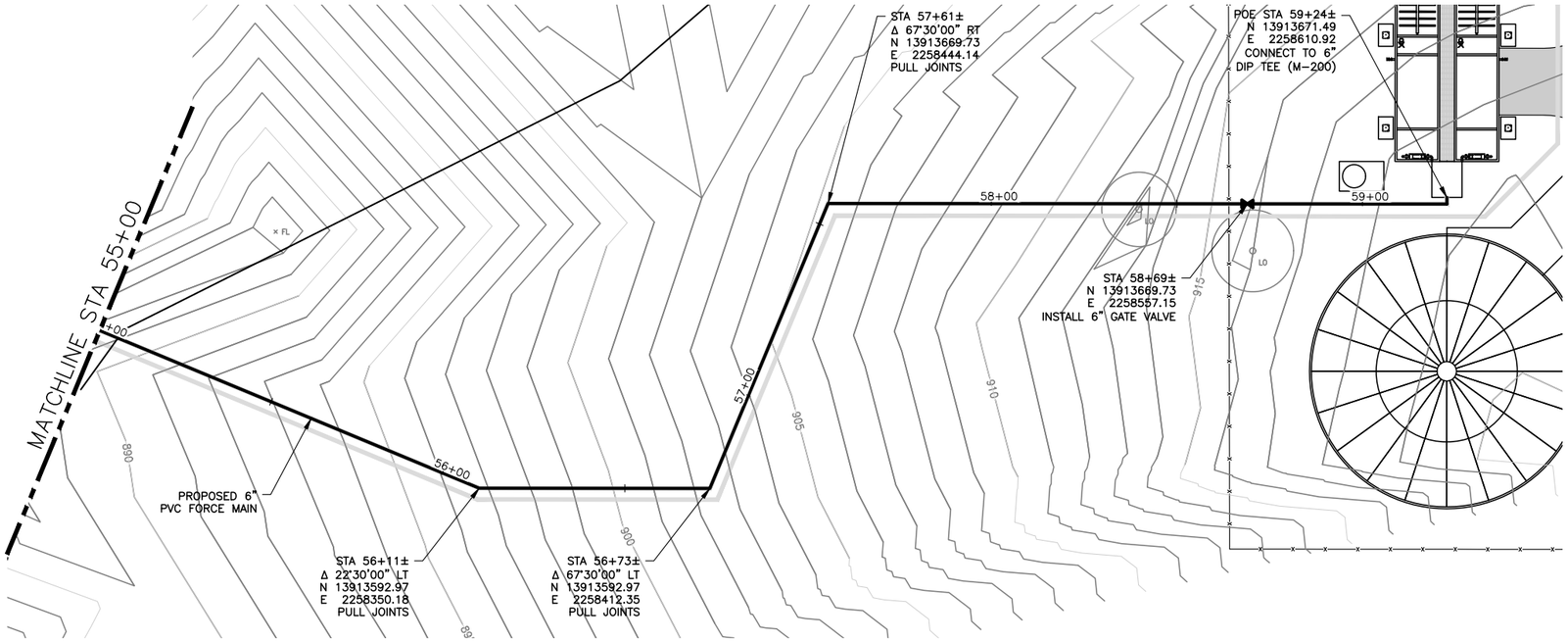

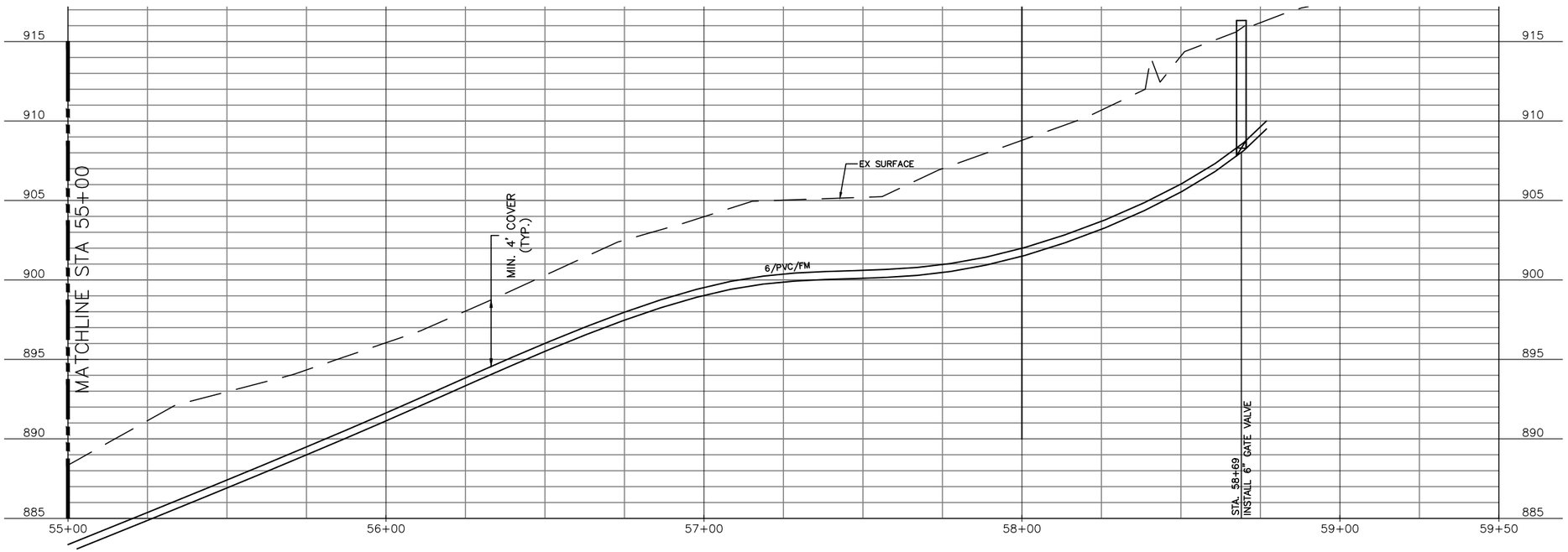

ALAN PLUMMER ASSOCIATES, INC.
ENVIRONMENTAL ENGINEERS AND SCIENTISTS
6300 LA CALMA DRIVE, SUITE 400
AUSTIN, TEXAS 78752-3843
PHONE: 512-452-5905 FAX: 512-452-2325
TEXAS REGISTERED ENGINEERING FIRM F-13

NO.	DATE	REVISION	BY

CITY OF WIMBERLEY
221 Stillwater
Wimberley, TX 78676

CITY OF WIMBERLEY
WASTEWATER TREATMENT PLANT AND COLLECTION SYSTEM PROJECT

FORCE MAIN PLAN AND PROFILE
LN A STA 55+00 TO STA 59+24

STATE OF TEXAS
STEPHEN J. COONAN
65516
LICENSED PROFESSIONAL ENGINEER
12/15/16

BAR IS ONE INCH ON ORIGINAL DRAWING.
ONE INCH

DESIGNED C. SYVARTH
DRAWN B. DICKMAN
CHECKED D. FRANKI
REVIEWED S. COONAN

Seq. of

Dwg. No. C-112

1732-002-01

PRINTED: 12/15/2016 10:03 AM M:\Projects\1732\002-01\Acad\SHEETFILES\C-112 FM LN A.dwg SAVED: 12/15/2016 9:58 AM USER: Dickman, Brian

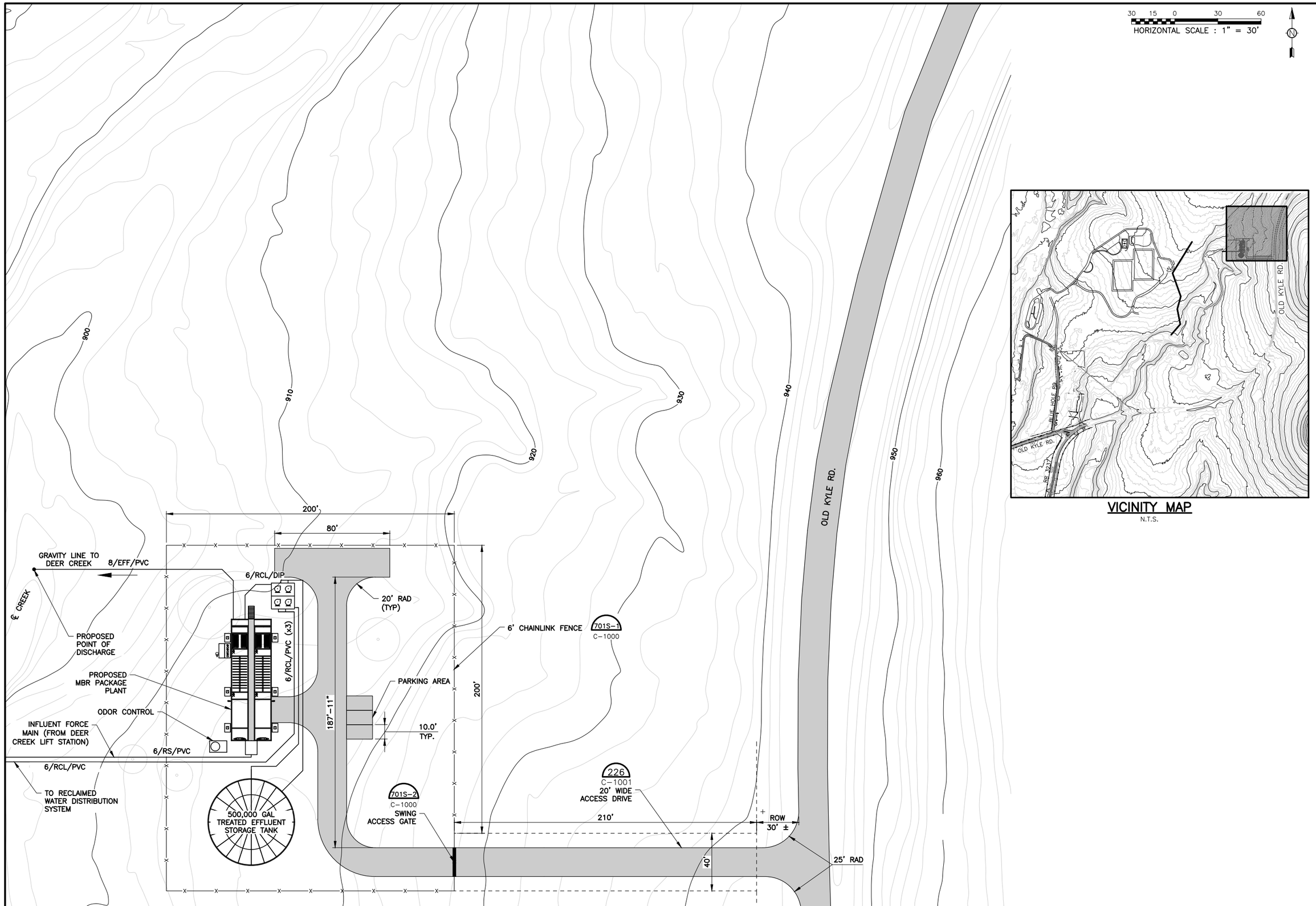

VICINITY MAP

N.T.S.

ALAN PLUMMER ASSOCIATES, INC.
ENVIRONMENTAL ENGINEERS AND SCIENTISTS
6300 LA CALMA DRIVE, SUITE 400
AUSTIN, TEXAS 78752-3843
PHONE: 512-452-5905 FAX: 512-452-2325
TEXAS REGISTERED ENGINEERING FIRM F-13

NO.	DATE	REVISION	BY

CITY OF WIMBERLEY
221 Stillwater
Wimberley, TX 78676

CITY OF WIMBERLEY
WASTEWATER TREATMENT PLANT AND COLLECTION SYSTEM PROJECT

MBR PACKAGE PLANT
SITE PLAN

STATE OF TEXAS
STEPHEN J. COONAN
65516
LICENSED PROFESSIONAL ENGINEER
12/15/16

BAR IS ONE INCH ON ORIGINAL DRAWING.
ONE INCH

DESIGNED C. SYVARTH
DRAWN A. PRICKETT
CHECKED H. FRELS
REVIEWED S. COONAN

Seq. of

Dwg. No. C-200

1732-002-01

PRINTED: 12/14/2016 6:26 PM M:\Projects\1732\002-01\Acad\SHEETFILES\C-200.dwg SAVED: 11/4/2016 3:11 PM USER: Dickman, Brian

FOUL AIR SOURCES TO BE CONNECTED TO TREATMENT:

1. AUTOMATIC FINE SCREEN A
2. AUTOMATIC FINE SCREEN B
3. SLUDGE STORAGE TANK A
4. SLUDGE STORAGE TANK B

NOTES:

1. DRAWINGS ARE INTENDED TO ILLUSTRATE THE GENERAL ARRANGEMENT OF THE PLANT ONLY. DETAILED DRAWINGS SHALL BE SUBMITTED BY THE PLANT SUPPLIER WITH THE CONTRACTOR'S BID ALONG WITH CALCULATIONS SUPPORTING THE SIZE OF ALL TANKS AND EQUIPMENT PROPOSED FOR USE WITHIN THE PLANT. REFERENCE SPECIFICATIONS FOR PLANT REQUIREMENTS.
2. SUPPLIER IS RESPONSIBLE FOR PACKAGE PLANT FOUNDATION DESIGN. THE PROPOSED DESIGN SHALL BE SEALED BY A LICENSED TEXAS PROFESSIONAL ENGINEER. DESIGN SHALL CONSIDER THE RESULTS OF THE GEOTECHNICAL SURVEY WHICH IS AVAILABLE FOR REVIEW.
3. THE LOCATION OF RAS, WAS, AND PERMEATE PUMPS IS NOT REPRESENTED BUT SHALL BE INCLUDED IN THE CONTRACTORS DRAWINGS SUBMITTED WITH THE BID. SEE ALSO PID DRAWINGS.
4. FOR CLARITY, THE RECYCLE, WASTE, AND DRAIN LINES ARE NOT SHOWN, BUT SHALL BE INCLUDED IN DRAWINGS SUBMITTED WITH THE BID. SEE ALSO PID DRAWINGS.
5. SUPPLIER IS RESPONSIBLE FOR EQUIPMENT PAD DESIGN.
6. SEE SPECIFICATION 15415 FOR NON-PLUMBED EYE WASH FIXTURES.
7. CONTRACTOR IS RESPONSIBLE FOR POWER CONNECTION:

   PERDENALES ELECTRIC
   KYLE-BUDA PLANNING DEPT.
   1-800-868-4791 X7525

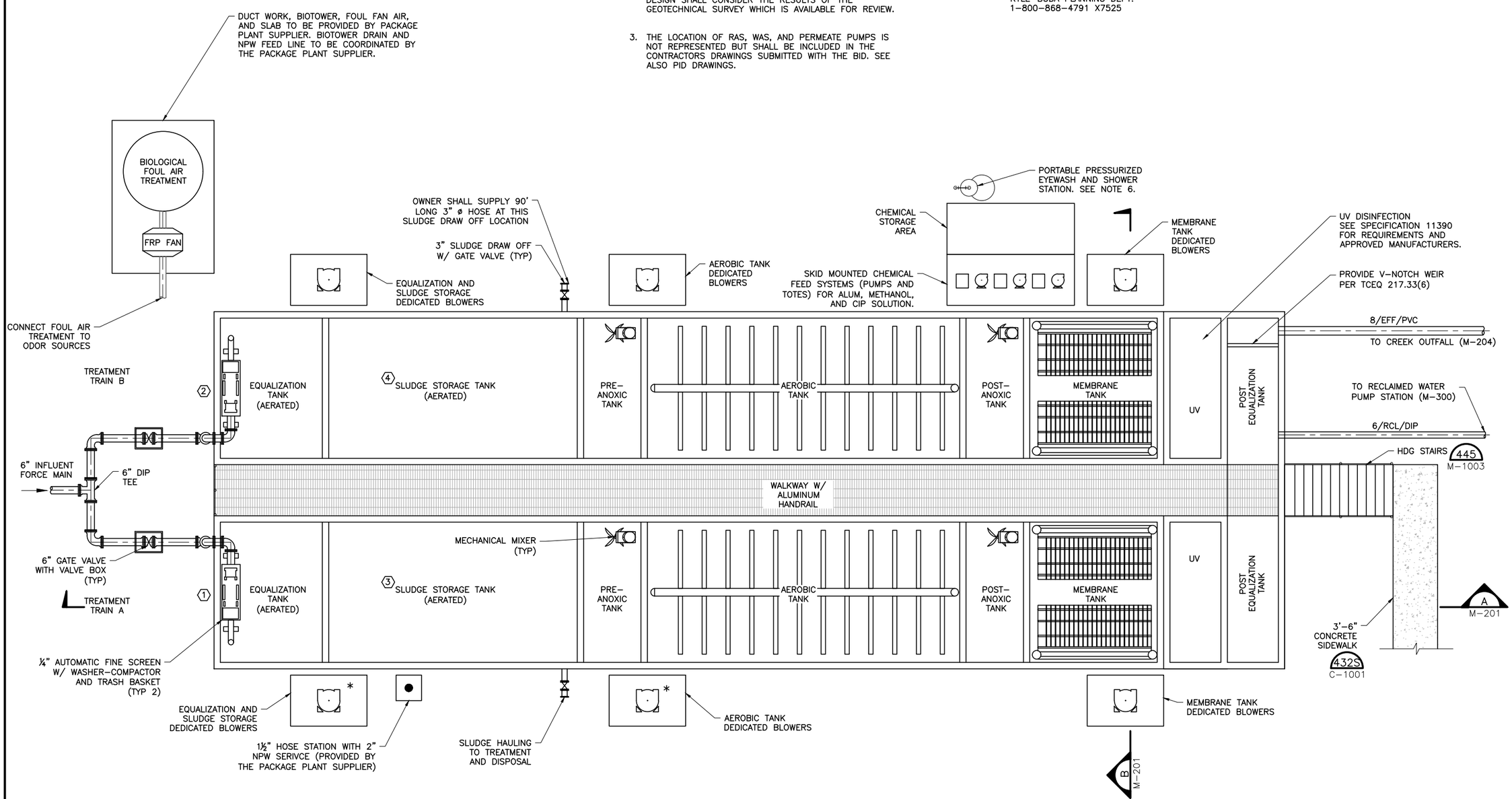

* BLOWER SKIDS INDICATED BY AN ASTERISK SHALL HAVE 6" PIPE BOLLARD AT EXPOSED CORNERS TO PROTECT THE EQUIPMENT FROM PLANT TRAFFIC. SEE DETAIL 500-S/M-1000.

PLAN

SCALE: 1/4"=1'-0"

ALAN PLUMMER ASSOCIATES, INC.
ENVIRONMENTAL ENGINEERS AND SCIENTISTS
6300 LA CALMA DRIVE, SUITE 400
AUSTIN, TEXAS 78752-3843
PHONE: 512-452-5905 FAX: 512-452-2325
TEXAS REGISTERED ENGINEERING FIRM F-13

NO.	DATE	REVISION	BY

CITY OF WIMBERLEY
221 Stillwater
Wimberley, TX 78676

CITY OF WIMBERLEY
WASTEWATER TREATMENT PLANT AND COLLECTION SYSTEM PROJECT

MBR PACKAGE PLANT
PACKAGE PLANT PLAN

STATE OF TEXAS
STEPHEN J. COONAN
65516
LICENSED PROFESSIONAL ENGINEER
12/15/16

BAR IS ONE INCH ON ORIGINAL DRAWING.
ONE INCH

DESIGNED	H. FRELS
DRAWN	A. PRICKETT
CHECKED	C. SYVARTH
REVIEWED	S. COONAN

Seq. of

Dwg. No. **M-200**

1732-002-01

PRINTED: 12/14/2016 10:26 PM M:\Projects\1732\002-01\Acad\SHEETFILES\M-200.dwg SAVED: 12/13/2016 5:08 PM USER: Bauman,Brian

NOTES:

1. REFER TO DRAWING M–200 FOR ADDITIONAL NOTES.
2. PACKAGE PLANT MANUFACTURER SHALL SUPPLY HYDRAULIC GRADE THROUGHOUT PLANT WITH BID SUBMITTAL

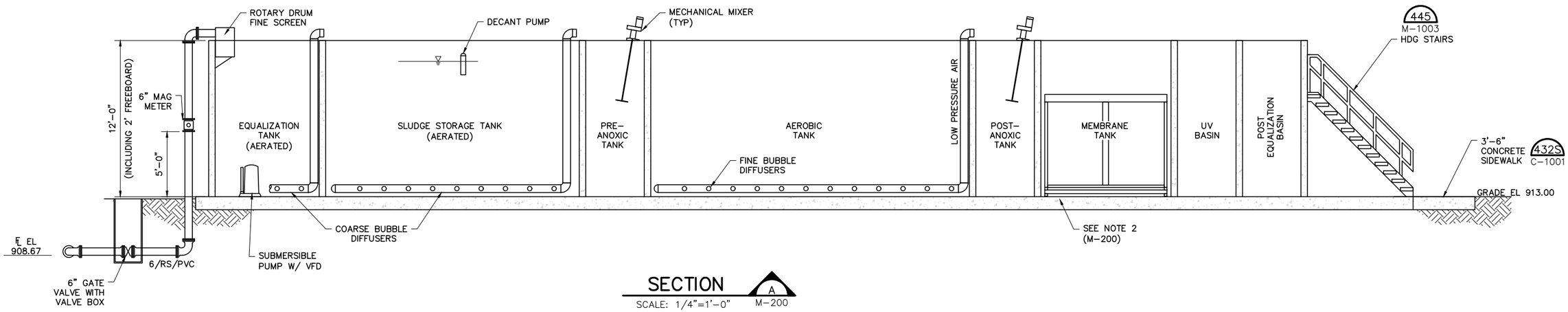

SECTION A M–200
SCALE: 1/4"=1'–0"

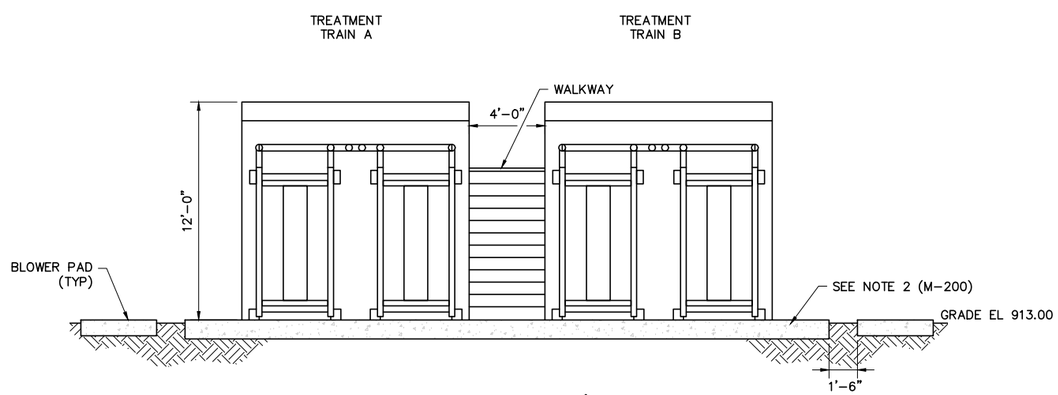

SECTION B M–200
SCALE: 1/4"=1'–0"

ALAN PLUMMER ASSOCIATES, INC.
ENVIRONMENTAL ENGINEERS AND SCIENTISTS
6300 LA CALMA DRIVE, SUITE 400
AUSTIN, TEXAS 78752-3843
PHONE: 512-452-5905 FAX: 512-452-2325
TEXAS REGISTERED ENGINEERING FIRM F-13

NO.	DATE	REVISION	BY

CITY OF WIMBERLEY
221 Stillwater
Wimberley, TX 78676

CITY OF WIMBERLEY
WASTEWATER TREATMENT PLANT AND COLLECTION SYSTEM PROJECT

MBR PACKAGE PLANT
PACKAGE PLANT SECTIONS

STATE OF TEXAS
STEPHEN J. COONAN
65516
LICENSED PROFESSIONAL ENGINEER
12/15/16

BAR IS ONE INCH ON ORIGINAL DRAWING.
ONE INCH

DESIGNED H. FRELS
DRAWN A. PRICKETT
CHECKED C. SYVARTH
REVIEWED S. COONAN

Seq. of

Dwg. No. M–201

1732–002–01

PRINTED: 12/14/2016 6:28 PM M:\Projects\1732\002-01\Acad\SHEETFILES\M-201.dwg SAVED: 12/13/2016 5:08 PM USER: Dickman, Brian

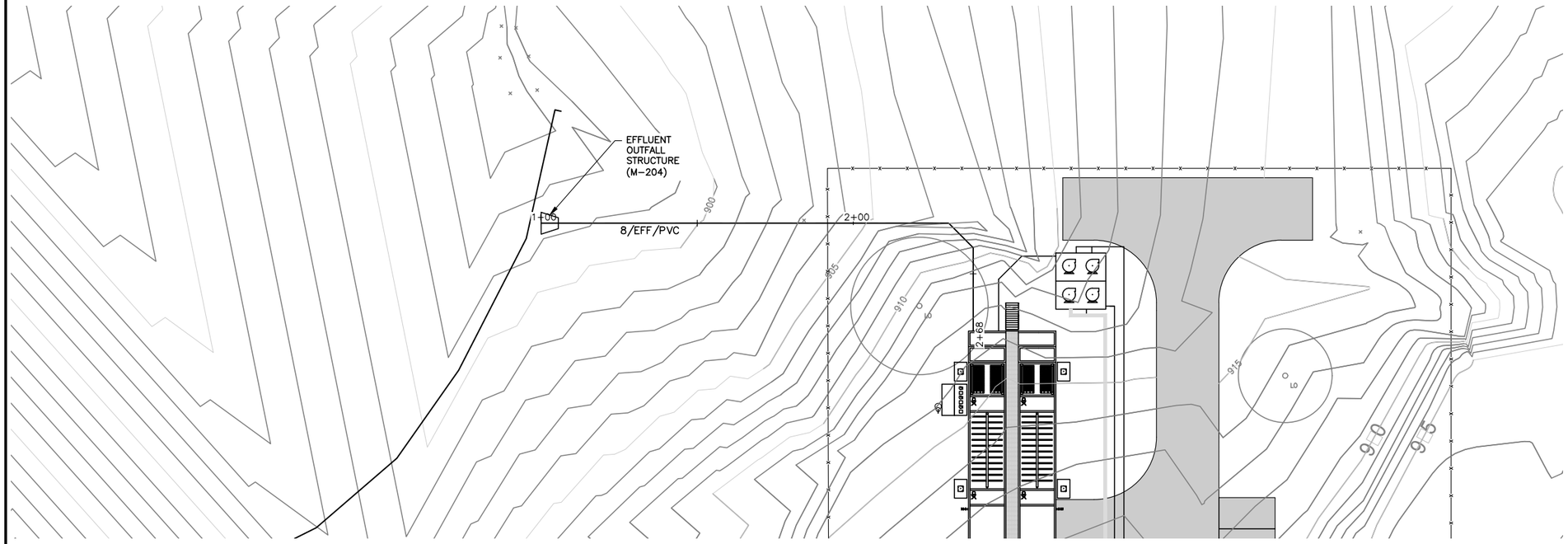

HORIZONTAL SCALE : 1" = 20'
VERTICAL SCALE : 1" = 4'

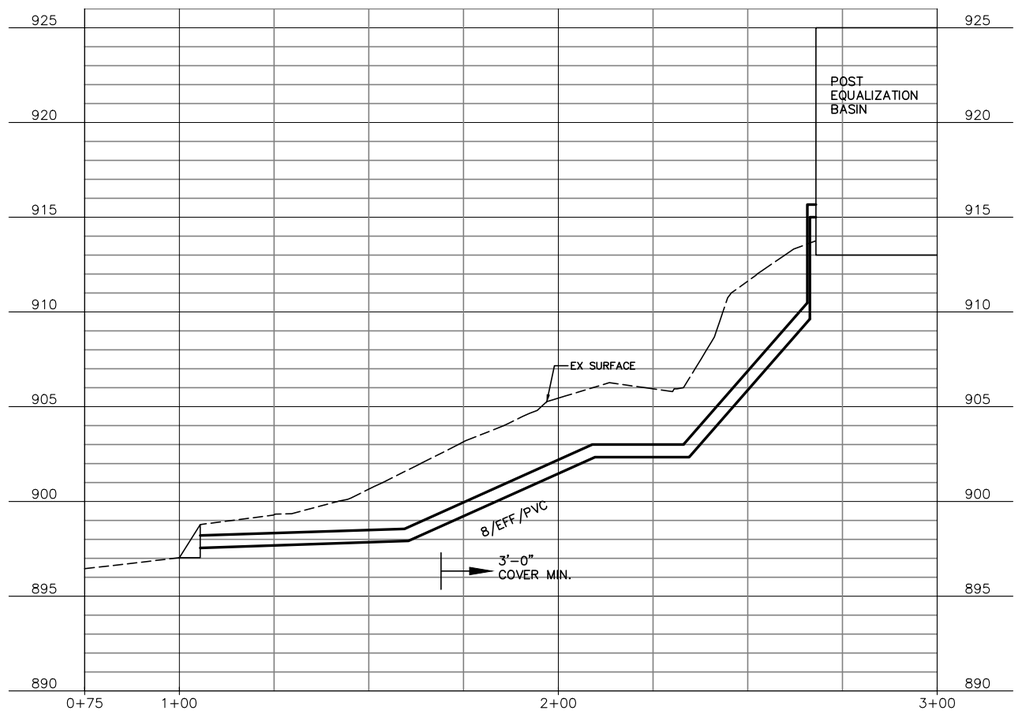

ALAN PLUMMER ASSOCIATES, INC.
ENVIRONMENTAL ENGINEERS AND SCIENTISTS
6300 LA CALMA DRIVE, SUITE 400
AUSTIN, TEXAS 78752-3843
PHONE: 512-452-5905 FAX: 512-452-2325
TEXAS REGISTERED ENGINEERING FIRM F-13

NO.	DATE	REVISION	BY

CITY OF WIMBERLEY
221 Stillwater
Wimberley, TX 78676

CITY OF WIMBERLEY
WASTEWATER TREATMENT PLANT AND COLLECTION SYSTEM PROJECT
MBR PACKAGE PLANT

EFFLUENT PLAN AND PROFILE

STATE OF TEXAS
STEPHEN J. COONAN
65516
LICENSED PROFESSIONAL ENGINEER
12/15/16

BAR IS ONE INCH ON ORIGINAL DRAWING.
ONE INCH

DESIGNED C. SYVARTH
DRAWN B. DICKMAN
CHECKED D. FRANKI
REVIEWED S. COONAN

Seq. of

Dwg. No. **M-203**

1732-002-01

PRINTED: 12/14/2016 6:29 PM M:\Projects\1732\002-01\Acad\SHEETFILES\M-203.dwg SAVED: 12/5/2016 4:35 PM USER: Dickman, Brian

NOTES:

1. CHAMFER ALL VISIBLE EXTERNAL CORNERS.
2. REFER TO TYPICAL EXCAVATION AND BACKFILL DETAIL SHOWN IN THE STRUCTURAL STANDARD DETAILS SHEET FOR THE EXCAVATION, SUBGRADE AND BACKFILL REQUIREMENTS.

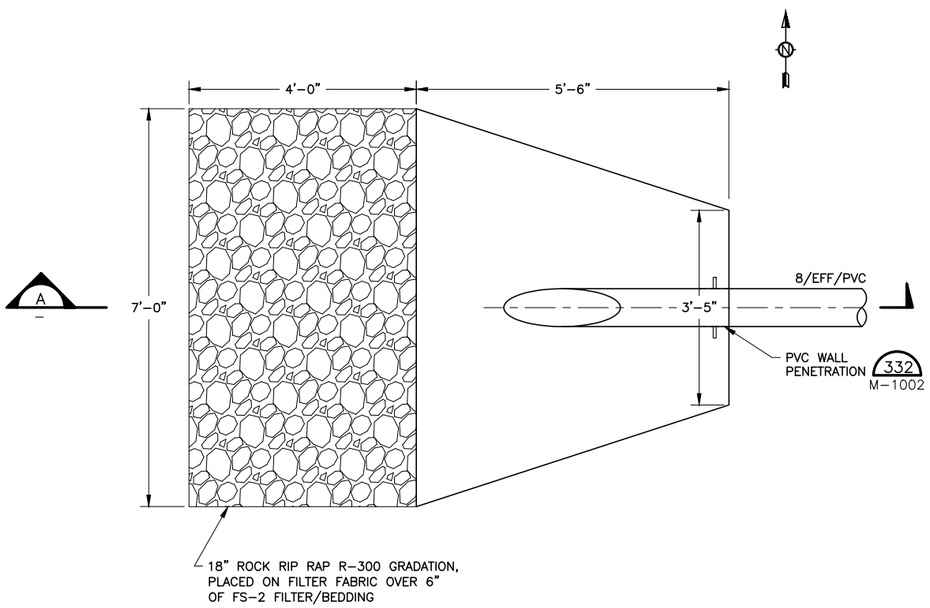

PLAN

SCALE: 3/4"=1'-0"

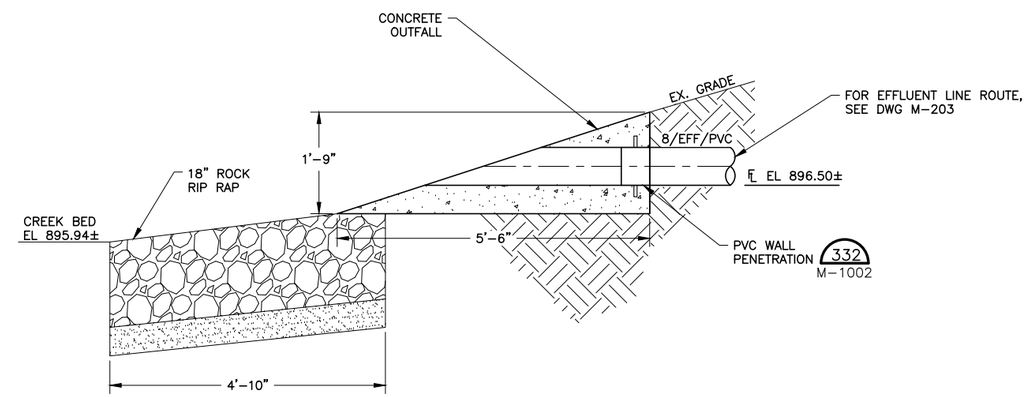

SECTION A

SCALE: 3/4"=1'-0"

ALAN PLUMMER ASSOCIATES, INC.
ENVIRONMENTAL ENGINEERS AND SCIENTISTS
6300 LA CALMA DRIVE, SUITE 400
AUSTIN, TEXAS 78752-3843
PHONE: 512-452-5905 FAX: 512-452-2325
TEXAS REGISTERED ENGINEERING FIRM F-13

NO.	DATE	REVISION	BY

CITY OF WIMBERLEY
221 Stillwater
Wimberley, TX 78676

CITY OF WIMBERLEY
WASTEWATER TREATMENT PLANT AND COLLECTION SYSTEM PROJECT

MBR PACKAGE PLANT
EFFLUENT OUTFALL STRUCTURE

STATE OF TEXAS
STEPHEN J. COONAN
65516
LICENSED PROFESSIONAL ENGINEER
12/15/16

BAR IS ONE INCH ON ORIGINAL DRAWING.
ONE INCH

DESIGNED H. FRELS
DRAWN A. PRICKETT
CHECKED C. SYVARTH
REVIEWED S. COONAN

Seq. of

Dwg. No. M-204

1732-002-01

PRINTED: 12/14/2016 6:30 PM M:\Projects\1732\002-01\Acad\SHEETFILES\M-204.dwg SAVED: 12/2/2016 4:05 PM USER: Dickman, Brian

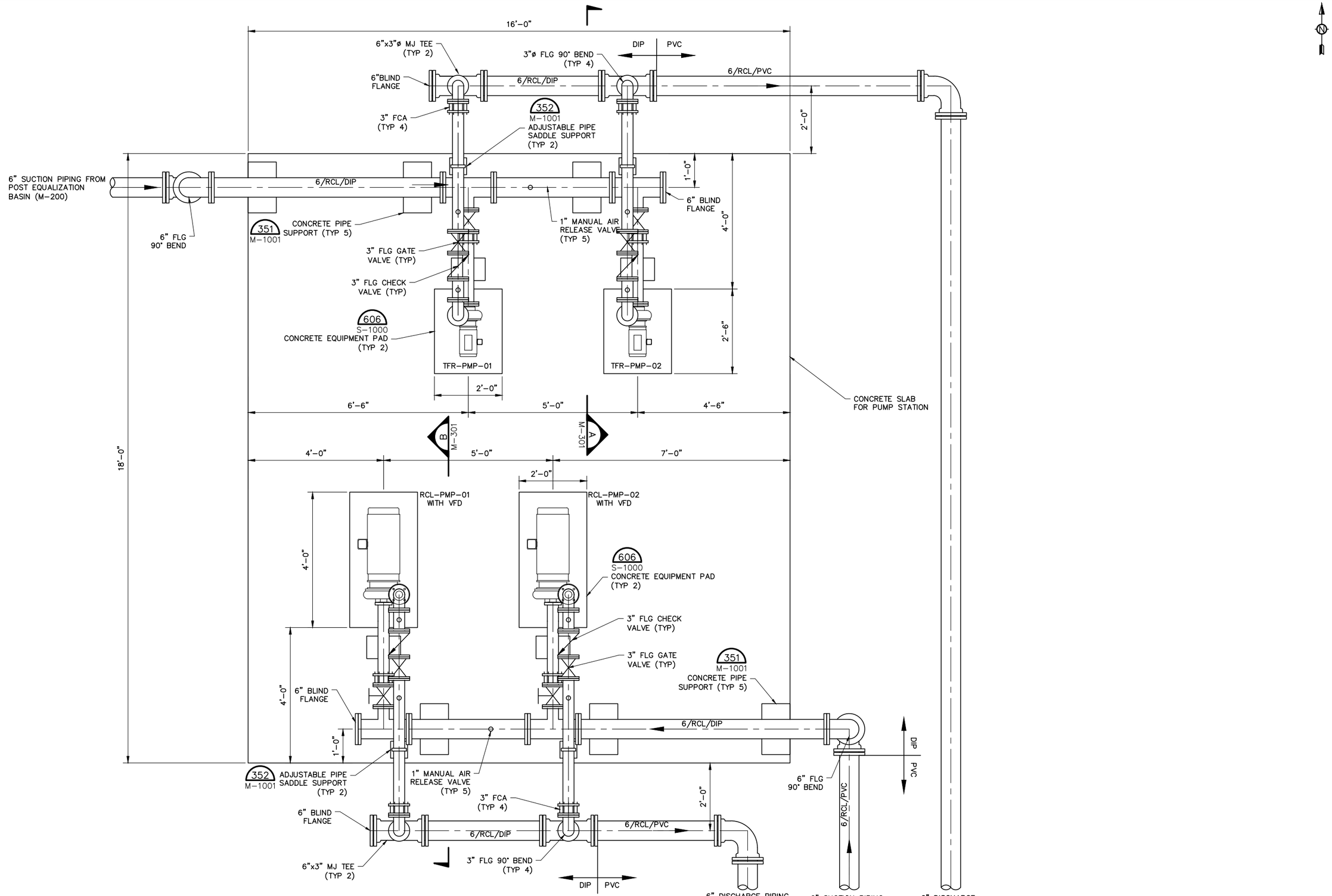

PLAN

SCALE: 3/4"=1'-0"

ALAN PLUMMER ASSOCIATES, INC.
ENVIRONMENTAL ENGINEERS AND SCIENTISTS
6300 LA CALMA DRIVE, SUITE 400
AUSTIN, TEXAS 78752-3843
PHONE: 512-452-5905 FAX: 512-452-2325
TEXAS REGISTERED ENGINEERING FIRM F-13

NO.	DATE	REVISION	BY

CITY OF WIMBERLEY
221 Stillwater
Wimberley, TX 78676

CITY OF WIMBERLEY
WASTEWATER TREATMENT PLANT AND COLLECTION SYSTEM PROJECT

RECLAIMED WATER SYSTEM
PUMP STATION PLAN

STATE OF TEXAS
STEPHEN J. COONAN
65516
LICENSED PROFESSIONAL ENGINEER
12/15/16

BAR IS ONE INCH ON ORIGINAL DRAWING.
ONE INCH

DESIGNED M. JIMENEZ
DRAWN A. PRICKETT
CHECKED H. FRELS
REVIEWED S. COONAN

Seq. of

Dwg. No. M-300

1732-002-01

PRINTED: 12/14/2016 6:32 PM M:\Projects\1732\002-01\Acad\SHEETFILES\M-300.dwg SAVED: 10/21/2016 7:41 AM USER: Dickman, Brian

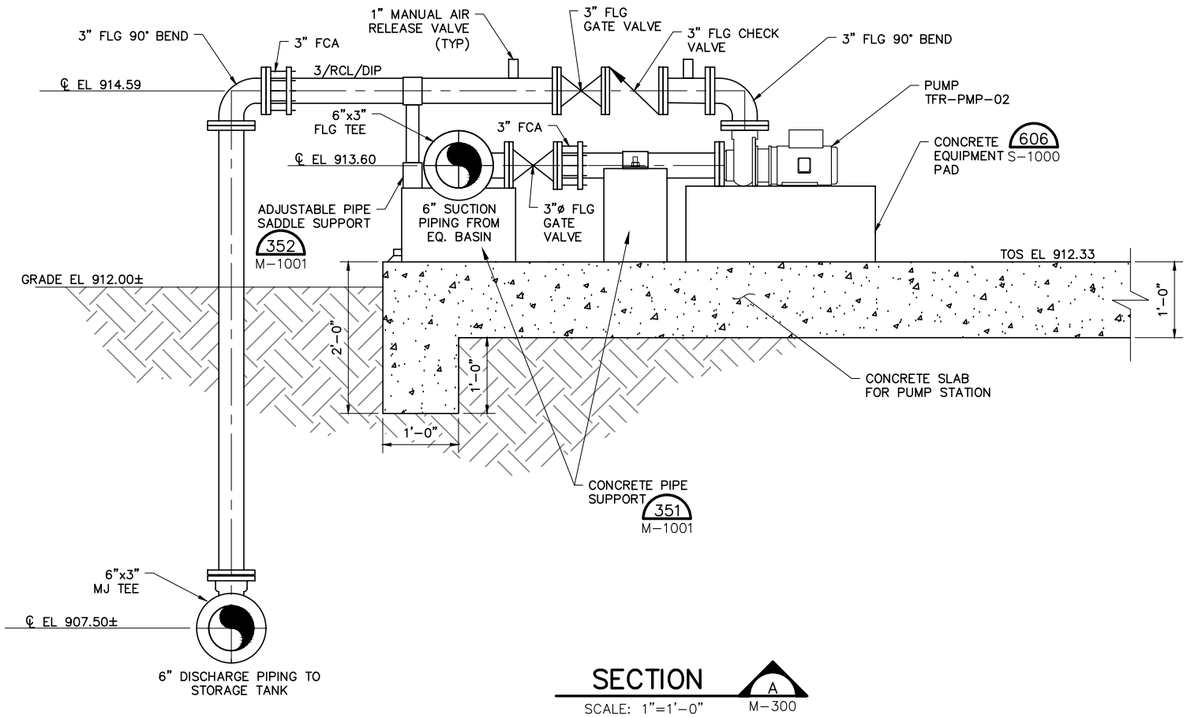

SECTION A M-300
SCALE: 1"=1'-0"

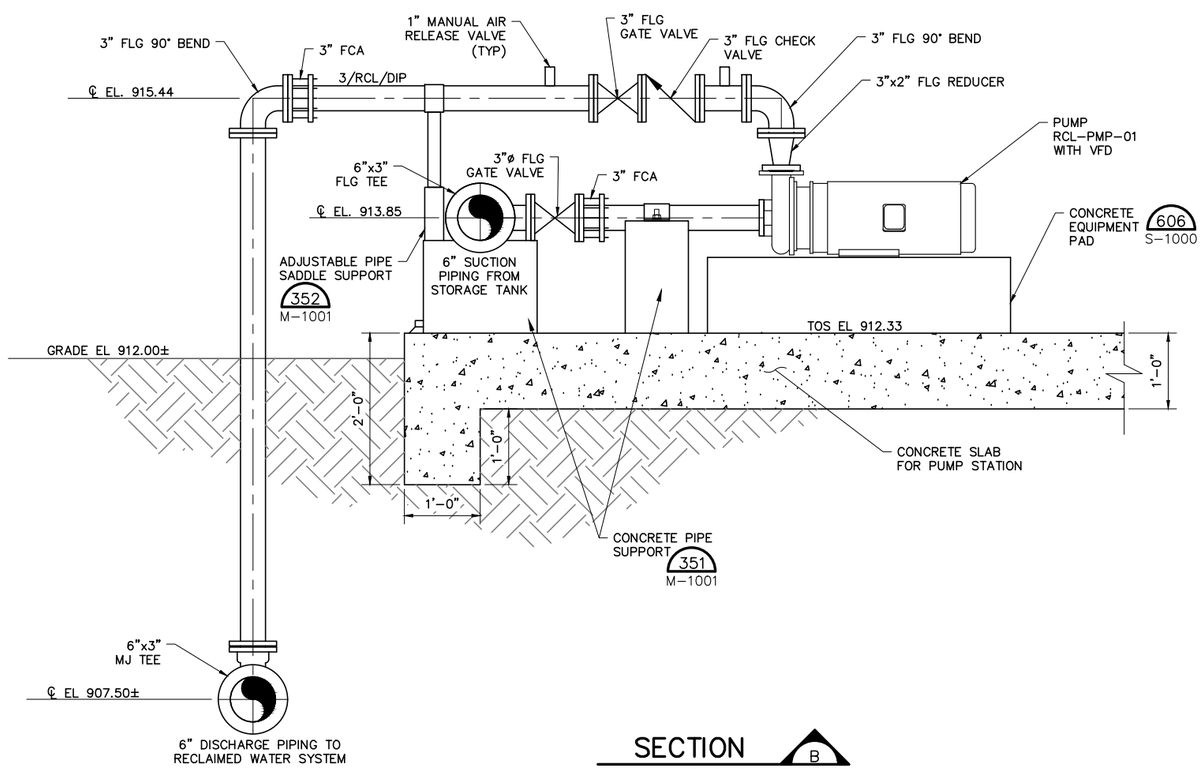

SECTION B M-300
SCALE: 1"=1'-0"

PUMP SCHEDULE		
ID	TFR-PMP-01 & TFR-PMP-02	RCL-PMP-01 & RCL-PMP-02
SERVICE	RECLAIMED WATER (TO STORAGE TANK)	RECLAIMED WATER (TO IRRIGATION SYSTEM)
TYPE	END SUCTION CENTRIFUGAL	END SUCTION CENTRIFUGAL
FLOW GPM	208	240
HEAD FT	20.6	267
PUMP SIZE	3 x 3 - 5	2 ½ x 3 - 10
MOTOR HP	3	40
MOTOR SPEED	3450 RPM	3550 RPM
MIN. EFF %	60.1	65.1
REF. MFG	GOULDS (OR APPROVED EQUAL)	GOULDS (OR APPROVED EQUAL)
MODEL	53AI1H9D0	11AI1R9GO

ALAN PLUMMER ASSOCIATES, INC.
ENVIRONMENTAL ENGINEERS AND SCIENTISTS
6500 LA CALMA DRIVE, SUITE 400
AUSTIN, TEXAS 78752-3843
PHONE: 512-452-5905 FAX: 512-452-2325
TEXAS REGISTERED ENGINEERING FIRM F-13

NO.	DATE	REVISION	BY

CITY OF WIMBERLEY
221 Stillwater
Wimberley, TX 78676

CITY OF WIMBERLEY
WASTEWATER TREATMENT PLANT AND COLLECTION SYSTEM PROJECT

RECLAIMED WATER SYSTEM
PUMP STATION SECTIONS

STATE OF TEXAS
STEPHEN J. COONAN
65516
LICENSED PROFESSIONAL ENGINEER
12/15/16

BAR IS ONE INCH ON ORIGINAL DRAWING.
ONE INCH

DESIGNED M. JIMENEZ
DRAWN A. PRICKETT
CHECKED H. FRELS
REVIEWED S. COONAN

Seq. of

Dwg. No. M-301

1732-002-01

PRINTED: 12/14/2016 6:33 PM M:\Projects\1732\002-01\Acad\SHEETFILES\M-301.dwg SAVED: 10/21/2016 1:15 PM USER: Dickman, Brian

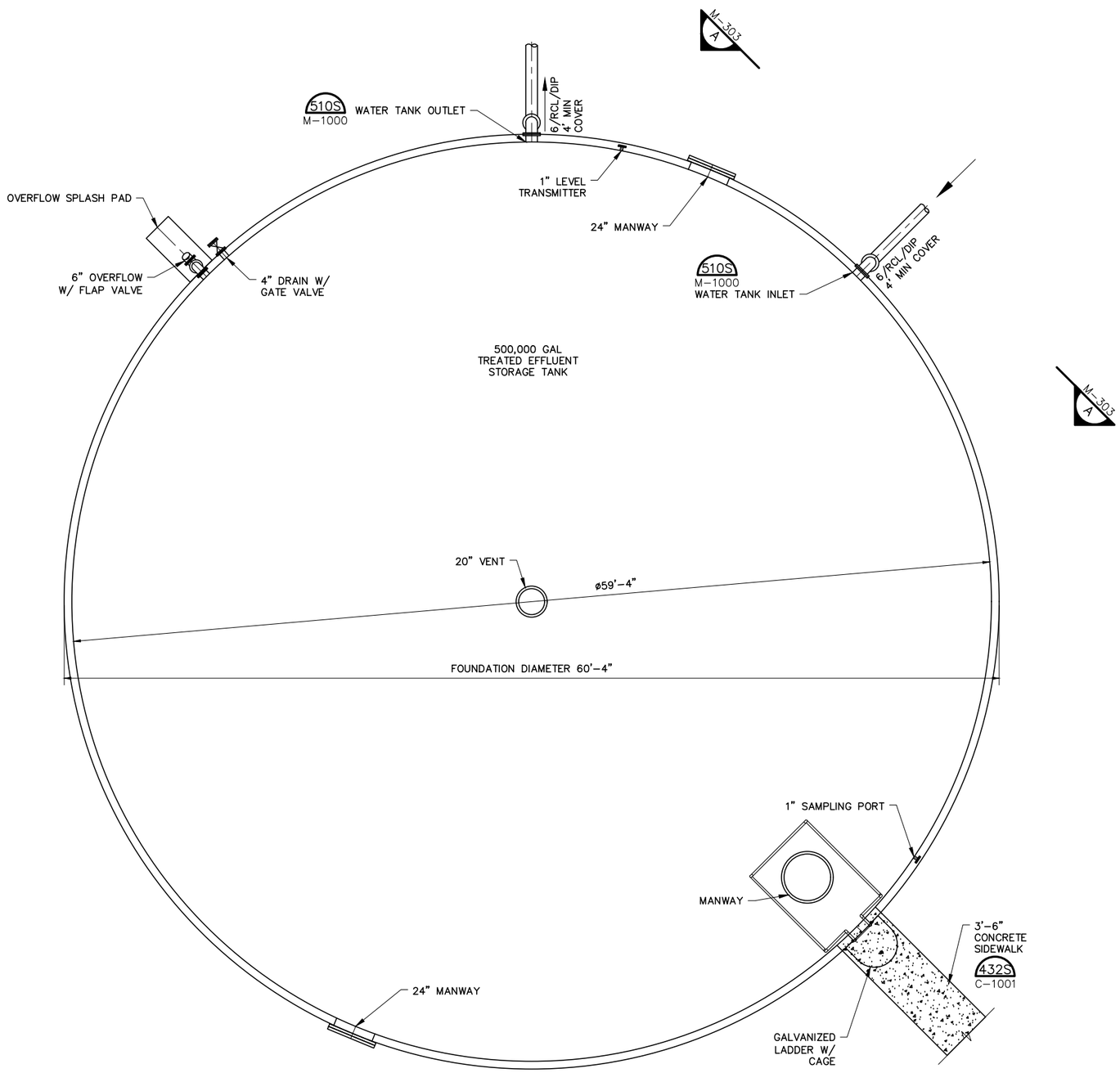

PLAN

SCALE: 1/4"=1'-0"

NOTES:

1. STRUCTURAL FOUNDATION SHALL BE DESIGNED AND PROVIDED BY THE WELDED STEEL TANK SUPPLIER.

ALAN PLUMMER ASSOCIATES, INC.
ENVIRONMENTAL ENGINEERS AND SCIENTISTS
6300 LA CALMA DRIVE, SUITE 400
AUSTIN, TEXAS 78752-3843
PHONE: 512-452-5905 FAX: 512-452-2325
TEXAS REGISTERED ENGINEERING FIRM F-13

NO.	DATE	REVISION	BY

CITY OF WIMBERLEY
221 Stillwater
Wimberley, TX 78676

CITY OF WIMBERLEY
WASTEWATER TREATMENT PLANT AND COLLECTION SYSTEM PROJECT

RECLAIMED WATER SYSTEM
STORAGE TANK PLAN

STATE OF TEXAS
STEPHEN J. COONAN
65516
LICENSED PROFESSIONAL ENGINEER
12/15/16

BAR IS ONE INCH ON ORIGINAL DRAWING.
ONE INCH

DESIGNED H. FRELS
DRAWN A. PRICKETT
CHECKED C. SYVARTH
REVIEWED S COONAN

Seq. of

Dwg. No. M-302

1732-002-01

PRINTED: 12/14/2016 6:34 PM M:\Projects\1732\002-01\Acad\SHEETFILES\M-302.dwg SAVED: 10/19/2016 10:45 AM USER: Dickman, Brian

NOTES:

1. STRUCTURAL FOUNDATION SHALL BE DESIGNED AND PROVIDED BY THE WELDED STEEL TANK SUPPLIER.

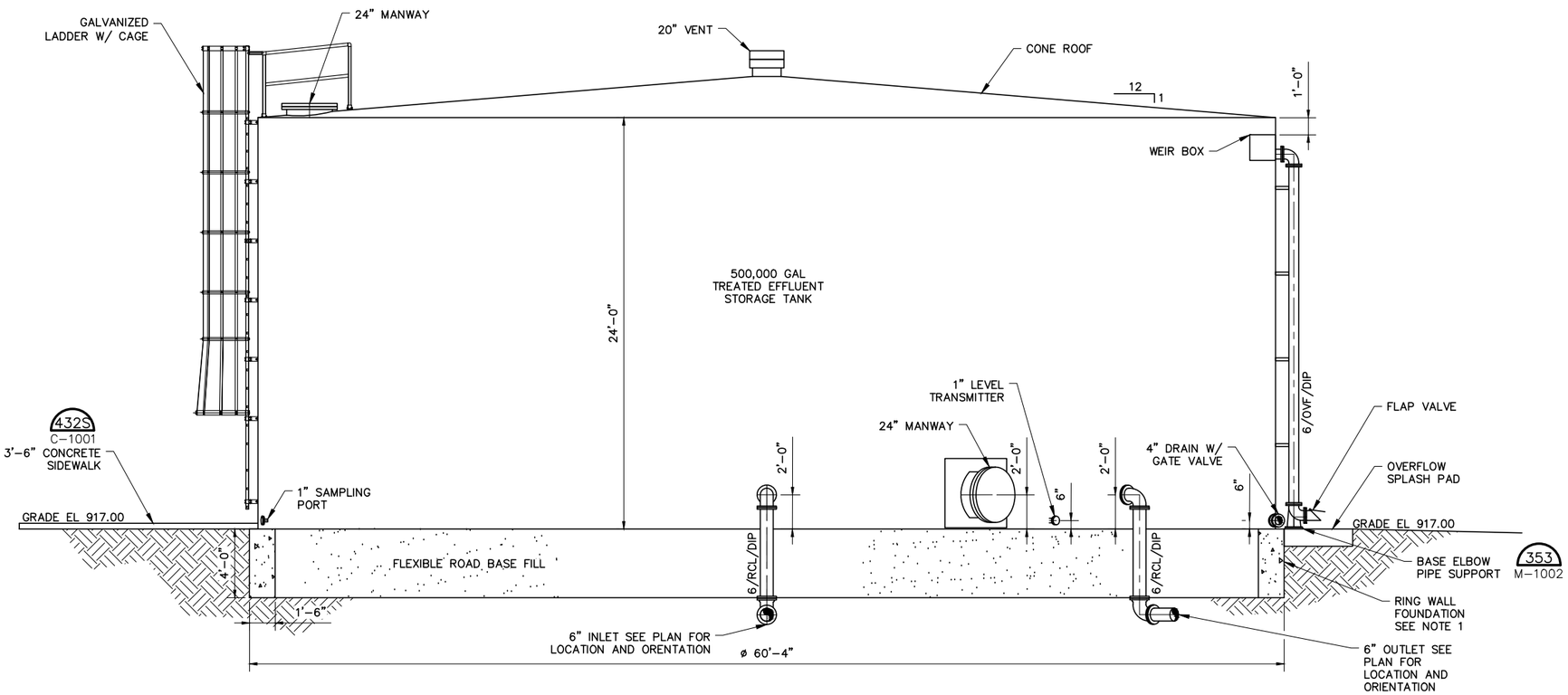

SECTION A M-302

SCALE: 1/8"=1'-0"

ALAN PLUMMER ASSOCIATES, INC.
ENVIRONMENTAL ENGINEERS AND SCIENTISTS
6300 LA CALMA DRIVE, SUITE 400
AUSTIN, TEXAS 78752-3843
PHONE: 512-452-5905 FAX: 512-452-2325
TEXAS REGISTERED ENGINEERING FIRM F-13

NO.	DATE	REVISION	BY

CITY OF WIMBERLEY
221 Stillwater
Wimberley, TX 78676

CITY OF WIMBERLEY
WASTEWATER TREATMENT PLANT AND COLLECTION SYSTEM PROJECT

RECLAIMED WATER SYSTEM
STORAGE TANK SECTION

STATE OF TEXAS
STEPHEN J. COONAN
65516
LICENSED PROFESSIONAL ENGINEER
12/15/16

BAR IS ONE INCH ON ORIGINAL DRAWING.
ONE INCH

DESIGNED H. FRELS
DRAWN A. PRICKETT
CHECKED C. SYVARTH
REVIEWED S. COONAN

Seq. of

Dwg. No. M-303

1732-002-01

PRINTED: 12/14/2016 6:35 PM M:\Projects\1732\002-01\Acad\SHEETFILES\M-303.dwg SAVED: 10/19/2016 10:39 AM USER: Dickman, Brian

SYMBOL	DESCRIPTION
	3-INCH GLOBE VALVE – 31
	3-INCH ISOLATION BALL VALVE – 3
	FULL IRRIGATION THROW – 105 HEADS
	¾ IRRIGATION THROW – 2 HEADS
	½ IRRIGATION THROW – 62 HEADS
	¼ IRRIGATION THROW – 6 HEADS
C	CONTROLLER

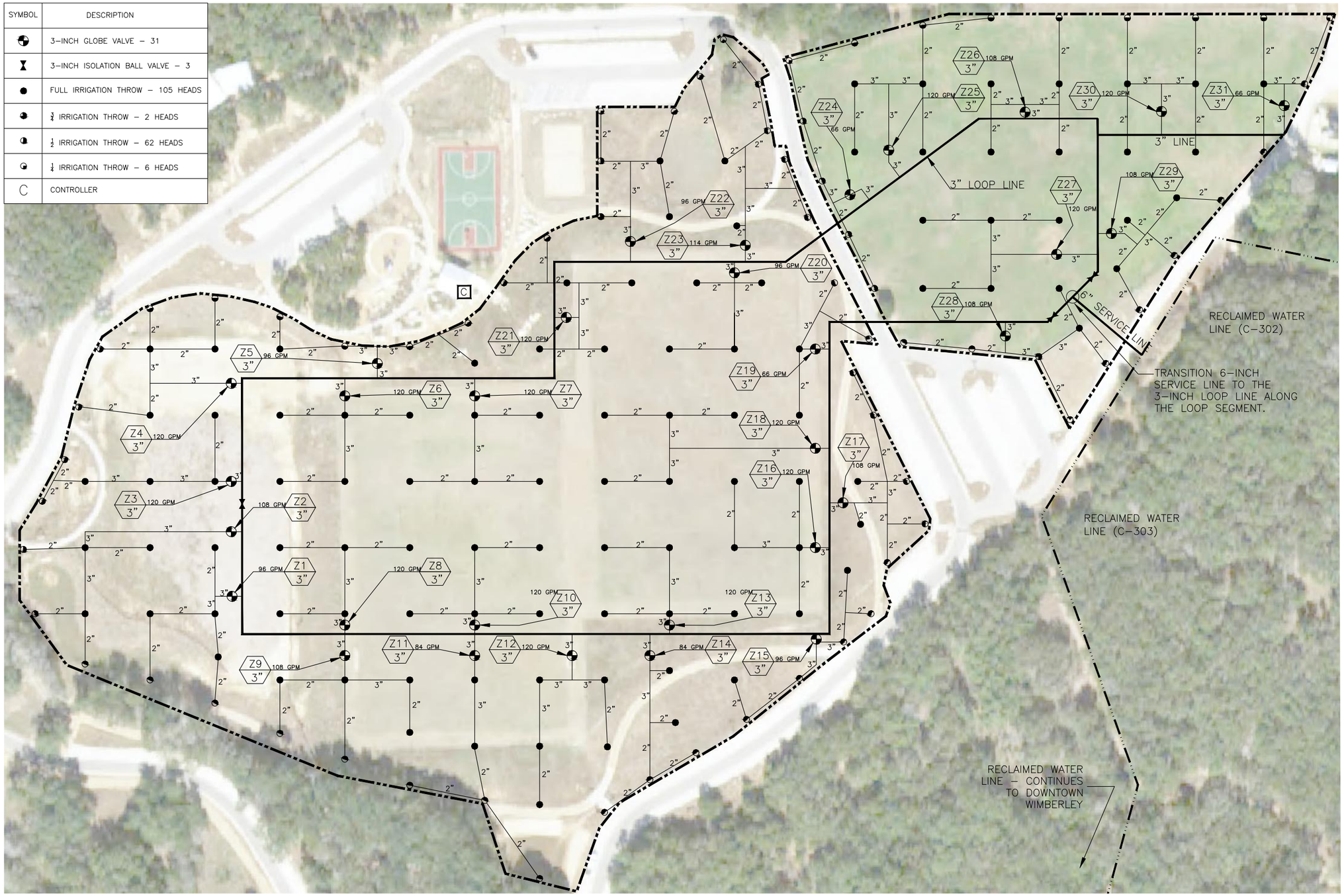

ALAN PLUMMER ASSOCIATES, INC.
ENVIRONMENTAL ENGINEERS AND SCIENTISTS
6300 LA CALMA DRIVE, SUITE 400
AUSTIN, TEXAS 78752-3843
PHONE: 512-452-5905 FAX: 512-452-2325
TEXAS REGISTERED ENGINEERING FIRM F-13

NO.	DATE	REVISION	BY

CITY OF WIMBERLEY
221 Stillwater
Wimberley, TX 78676

CITY OF WIMBERLEY
WASTEWATER TREATMENT PLANT AND COLLECTION SYSTEM PROJECT

RECLAIMED WATERLINE PLANS
IRRIGATION LAYOUT

STATE OF TEXAS
STEPHEN J. COONAN
65516
LICENSED PROFESSIONAL ENGINEER
12/15/16

BAR IS ONE INCH ON ORIGINAL DRAWING.
ONE INCH

DESIGNED C. SYVARTH
DRAWN B. DICKMAN
CHECKED H. FRELS
REVIEWED S. COONAN

Seq. of

Dwg. No. C-300

1732-002-01

PRINTED: 12/14/2016 6:36 PM M:\Projects\1732\002-01\Acad\SHEETFILES\C-300.dwg SAVED: 12/5/2016 3:48 PM USER: Dickman, Brian

IRRIGATION GENERAL NOTES

1. INTENT OF PLANS AND SPECIFICATIONS: TO INSTALL AN IRRIGATION SYSTEM FREE FROM DEFECTS IN MATERIALS AND WORKMANSHIP. PLANS AND SPECIFICATIONS MUST BE USED TOGETHER TO ACCOMPLISH THE PURPOSE OF THE PROJECT. NEITHER DOCUMENT IS COMPLETE WITHOUT THE OTHER. IN THE EVENT OF ANY DISCREPANCIES BETWEEN THE PLANS AND SPECIFICATIONS, THE FINAL DECISION TO BE FOLLOWED MUST BE MADE BY THE IRRIGATION DESIGNER. IN THE EVENT THIS NOTIFICATION IS NOT PERFORMED, CONTRACTOR ASSUMES FULL RESPONSIBILITY FOR REVISIONS
2. CONTRACTOR TO VERIFY SITE PRESSURE AND NOTIFY IRRIGATION DESIGNER OF ANY DIFFERENCES PRIOR TO INSTALLATION OR ORDERING OF MATERIALS. IF CONTRACTOR FAILS TO NOTIFY IRRIGATION DESIGNER, CONTRACTOR IS FINANCIALLY RESPONSIBLE FOR ANY NECESSARY SYSTEM ALTERATIONS THAT RESULT.
3. CONTRACTOR TO PROVIDE OWNER WITH "AS-BUILTS" FOR THE INSTALLED IRRIGATION SYSTEM PRIOR TO FINAL ACCEPTANCE OF WORK.
4. CONTRACTOR IS RESPONSIBLE FOR ARRANGING AND PAYING FOR ALL REQUIRED PERMITS AND INSPECTIONS.
5. DO NOT INSTALL THE IRRIGATION SYSTEM AS SHOWN ON THE DRAWINGS WHEN IT IS OBVIOUS IN THE FIELD THAT UNKNOWN OBSTRUCTIONS, GRADE DIFFERENCES OR DIFFERENCES IN AREA DIMENSIONS EXIST THAT MIGHT NOT HAVE BEEN CONSIDERED IN THE DESIGN. SUCH OBSTRUCTIONS OR CONFLICTS SHOULD BE BROUGHT TO THE ATTENTION OF THE IRRIGATION DESIGNER IMMEDIATELY. IN THE EVENT THIS NOTIFICATION IS NOT PERFORMED, THE CONTRACTOR SHALL ASSUME FULL RESPONSIBILITY FOR ANY NECESSARY REVISIONS.
6. THE CONTRACTOR SHALL RESTORE TO THE ORIGINAL CONDITION, WITHOUT CHARGE, ANY DAMAGE DUE TO NEGLIGENCE OF ANY OF THE CONTRACTOR'S EMPLOYEES, AGENTS, OR SUBCONTRACTORS. THE WORK MUST BE COMPLETED BEFORE FINAL PAYMENT IS MADE.
7. THE CONTRACTOR SHALL COORDINATE THE WORK FOR THE LOCATION AND INSTALLATION OF PIPE SLEEVES AND LATERALS THOUGH WALLS, UNDER ROADWAYS AND PAVING, AND THROUGHOUT THE LIMITS OF WORK.
8. MAINLINE PIPING, LATERALS AND CONTROL WIRES UNDER PAVING SHALL BE INSTALLED IN SEPARATE SLEEVES. SLEEVES SHALL BE OF SUFFICIENT SIZE FOR DOUBLE THE REQUIRED NUMBER OF WIRES AND PIPE.
9. PIPE SIZES SHALL CONFORM TO THOSE SHOWN ON THE DRAWINGS. NO SUBSTITUTIONS OF SMALLER PIPE SIZES SHALL BE PERMITTED, BUT SUBSTITUTIONS OF LARGER SIZES MAY BE APPROVED BY THE IRRIGATION DESIGNER. IF NO PIPE SIZING IS SHOWN ON THE PLANS OR IF PIPE SIZE IS UNCLEAR, CONTACT IRRIGATION DESIGNER. HYDRAULICS CALCULATED BASED ON HUNTER I-40 ROTOR WITH FULL CIRCLE OPPOSING NOZZLES (#23) WITH A THROW RADIUS OF 67 FEET AND A STATIC PRESSURE OF 80 PSI. OWNER TO PROVIDE A RECLAIMED WATER LINE SUFFICIENTLY PRESSURIZED TO SERVE THE IRRIGATION SYSTEM. CONTRACTOR TO CONNECT TO THE RECLAIMED WATER LINE.
10. CONTROLLER SHALL BE AN ALL-WEATHER CONTROLLER SECURED IN A METAL/STAINLESS CABINET WITH LOCK. CONTROLLER SHALL BE EQUIPPED WITH A MINIMUM OF 42 STATIONS. OWNER MAY ELECT TO HOUSE THE CONTROLLER WITHIN A PEDESTAL – CONTRACTOR TO CONFIRM WITH OWNER. CONTROLLER SHALL BE EQUIPPED WITH A RAIN/FREEZE SENSOR.
11. 120VAC ELECTRICAL POWER SOURCE AT CONTROLLER LOCATION SHALL BE PROVIDED BY OWNER. THE CONTRACTOR SHALL BE RESPONSIBLE FOR COORDINATING THE FINAL CONNECTION FROM THE ELECTRICAL SOURCE TO THE CONTROLLER WITH A LICENSED ELECTRICAL CONTRACTOR. THE FINAL CONTROLLER LOCATION SHALL BE APPROVED BY THE OWNER.
12. IRRIGATION HEADS, VALVES, AND CONTROLLER TIMING SHALL BE ADJUSTED TO PROVIDE OPTIMUM COVERAGE WITH MINIMAL OVERSPRAY ONTO ADJACENT CURBS, STREETS, WALKS, WALL AND EXISTING STRUCTURES. IF NECESSARY, THE CONTRACTOR SHALL ADJUST HEAD SPACING, NOZZLE ARC/TRAJECTORY, OR INSTALL ADDITIONAL HEADS TO ENSURE PROPER COVERAGE. INSTALLATION OF ANY ADDITIONAL HEADS REQUIRES IRRIGATION DESIGNER APPROVAL.
13. IRRIGATION HEAD SHALL INCLUDE RECLAIMED WATER ID, AND BE 6-INCH POP UP HEAD.
14. ALL PIPE SHALL BE BEDDED ON ALL SIDES WITH SIX INCHES OF ROCK FREE (3/8" MINUS) MATERIAL. IMPORT SAND IF NECESSARY. BACKFILL IN TWO OR MORE COMPACTED LIFTS. SETTLING OF TRENCHES BY MORE THAN AN INCH SHALL BE BROUGHT BACK TO FINISH GRADE AT THE CONTRACTOR'S EXPENSE.
15. IRRIGATION EQUIPMENT, NOT OTHERWISE DETAILED OR SPECIFIED, SHALL BE INSTALLED PER MANUFACTURER'S RECOMMENDATIONS AND SPECIFICATIONS.
16. THE CONTRACTOR SHALL PROVIDE IN-LINE AND/OR SPRINKLER CHECK VALVES AS REQUIRED THROUGHOUT THE IRRIGATION SYSTEM LOCATED WITHIN A SLOPED AREAS TO PREVENT LOW IRRIGATION HEAD DRAINAGE.
17. IRRIGATION HEADS SHALL BE SET PERPENDICULAR TO FINISH GRADE UNLESS OTHERWISE SPECIFIED.
18. 24 VOLT WIRE SHALL BE TYPE "UF" 600 VOLT, SOLID COPPER, SINGLE CONDUCTOR WIRE WITH PVC INSULATION AND BEAR UL APPROVAL FOR DIRECT UNDERGROUND BURIAL. COMMON WIRE IS TO BE 10 GAUGE WHITE; CONTROL WIRE IS TO BE 12 GAUGE RED (USE NO BLACK WIRE). TAPE AND BUNDLE WIRE AT 10' O.C. LAY BESIDE MAINLINE. SPLICE IN VALVE BOXES ONLY USING MANUFACTURED DRY-TYPE DIRECT BURY WATERPROOF CONNECTORS. PROVIDE 24" SLACK AT EACH ELBOW IN MAINLINE AND 30" SLACK AT EACH REMOTE CONTROL VALVE LOCATION. PULL ONE ADDITIONAL YELLOW 10 GAUGE SPARE WIRE TO THE MOST DISTANT VALVE LOCATION IN ALL DIRECTIONS OUT FROM THE CONTROLLER FOR POTENTIAL FUTURE USE.
19. ALL VALVES SHALL BE THREE INCH GLOBE VALVES WITH A RECLAIMED WATER ID AND HOUSED IN A SUFFICIENTLY SIZED IRRIGATION VALVE BOX.
20. PEA GRAVEL SHALL BE INSTALLED AT THE BASE OF ALL IRRIGATION VALVE BOXES. LEVEL OF PEA GRAVEL IN IRRIGATION VALVE BOXES SHALL BE A MINIMUM OF 2" BELOW THE BOTTOM OF THE VALVE/FILTERS SO THAT THE COMPONENTS ARE COMPLETELY VISIBLE. ALL PEA GRAVEL AND/OR DEBRIS TO BE CLEARED FROM TOP OF VALVE/ FILTERS AND THE LIP OF THE VALVE BOX.
21. BALL VALVES (ISOLATION VALVES) ARE REQUIRED AT VARIOUS POINTS IN THE SYSTEM TO CLOSE OFF PORTIONS OF THE SYSTEM FOR MAINTENANCE. BALL VALVES MUST BE SIZED THE SAME AS THE PIPE SECTION IN WHICH THEY ARE PLACED. BALL VALVES SHALL BE ENCLOSED IN VALVE BOXES.
22. ALL PIPING SHALL BE THOROUGHLY FLUSHED PRIOR TO EMITTER/NOZZLE INSTALLATION. CONTRACTOR IS RESPONSIBLE FOR ANY NECESSARY FLUSHING OF EMITTERS/NOZZLES DUE TO CLOGGING FOR THE DURATION OF THE MAINTENANCE PERIOD.
23. THIS IRRIGATION DESIGN IS BASED UPON USING THE SPECIFIED EQUIPMENT IN THE INSTALLATION/FABRICATION OF THE SYSTEM. CONTRACTOR, UPON APPROVAL OF THE OWNER AND/OR IRRIGATION DESIGNER, MAY SUBSTITUTE PRODUCTS/MANUFACTURES AS LONG AS ANY CHANGED EQUIPMENT MEETS OR EXCEEDS THE SPECIFICATIONS OF THE ORIGINALLY LISTED ITEM. CONTRACTOR TO BE RESPONSIBLE TO ENSURE THAT THE IRRIGATION SYSTEM OPERATES AT OPTIMUM SERVICE LEVEL.
24. THE SYSTEM, UPON COMPLETION, SHALL PROVIDE 100% WATER COVERAGE TO ALL VEGETATION. IF EXISTING PLANT MATERIAL IS TO REMAIN ON SITE, THE NEW IRRIGATION SYSTEM SHALL BE MODIFIED IN THE FIELD BY THE LANDSCAPE CONTRACTOR TO INCLUDE ALL EXISTING MATERIAL ON THE NEWLY INSTALLED AUTOMATIC IRRIGATION SYSTEM. THE CONTRACTOR IS RESPONSIBLE FOR THE INITIAL PROGRAMMING OF THE CONTROLLER AND SHALL WARRANTY THE SYSTEM TO BE FULLY FUNCTIONAL UPON PROJECT COMPLETION.
25. ALL IRRIGATION SHALL BE GUARANTEED FOR A MINIMUM PERIOD OF ONE YEAR FROM THE DATE OF FINAL APPROVAL BY THE CITY.

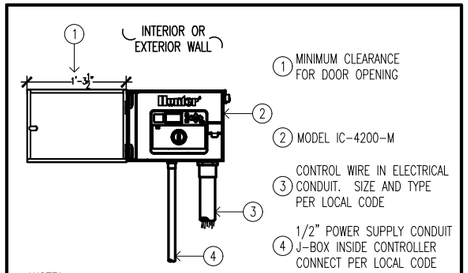

NOTE
42 STATION MODEL CONTROLLER. MOUNT CONTROLLER WITH LCD SCREEN AT EYE LEVEL. CONTROLLER SHALL BE HARD-WIRED TO GROUNDED 110 VAC SOURCE.

XX **I-CORE METAL CONTROLLER**
SCALE: 1" = 1'-0" Hunter IRRIGATION DETAIL

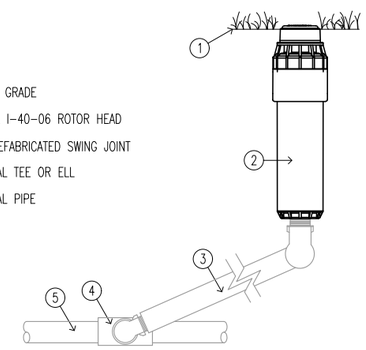

1. FINISH GRADE
2. MODEL I-40-06 ROTOR HEAD
3. 1" PREFABRICATED SWING JOINT
4. LATERAL TEE OR ELL
5. LATERAL PIPE

XX **I-40-06 ROTOR HEAD**
SCALE: 3" = 1'-0" Hunter IRRIGATION DETAIL

ALAN PLUMMER ASSOCIATES, INC.
ENVIRONMENTAL ENGINEERS AND SCIENTISTS
6500 LA CALMA DRIVE, SUITE 400
AUSTIN, TEXAS 78752-3843
PHONE: 512-452-5905 FAX: 512-452-2325
TEXAS REGISTERED ENGINEERING FIRM F-13

NO.	DATE	REVISION	BY

CITY OF WIMBERLEY
221 Stillwater
Wimberley, TX 78676

CITY OF WIMBERLEY
WASTEWATER TREATMENT PLANT AND COLLECTION SYSTEM PROJECT

RECLAIMED WATERLINE PLANS
IRRIGATION NOTES AND DETAILS

STATE OF TEXAS
STEPHEN J. COONAN
65516
LICENSED PROFESSIONAL ENGINEER
12/15/16

BAR IS ONE INCH ON ORIGINAL DRAWING.
ONE INCH

DESIGNED C. SYVARTH
DRAWN B. DICKMAN
CHECKED H. FRELS
REVIEWED S. COONAN

Seq. of

Dwg. No. **C-301**

1732-002-01

PRINTED: 12/14/2016 6:36 PM M:\Projects\1732\002-01\Acad\SHEETFILES\C-301.dwg SAVED: 9/16/2016 8:22 AM USER: Dickman, Brian

HORIZONTAL SCALE : 1" = 20'
VERTICAL SCALE : 1" = 4'

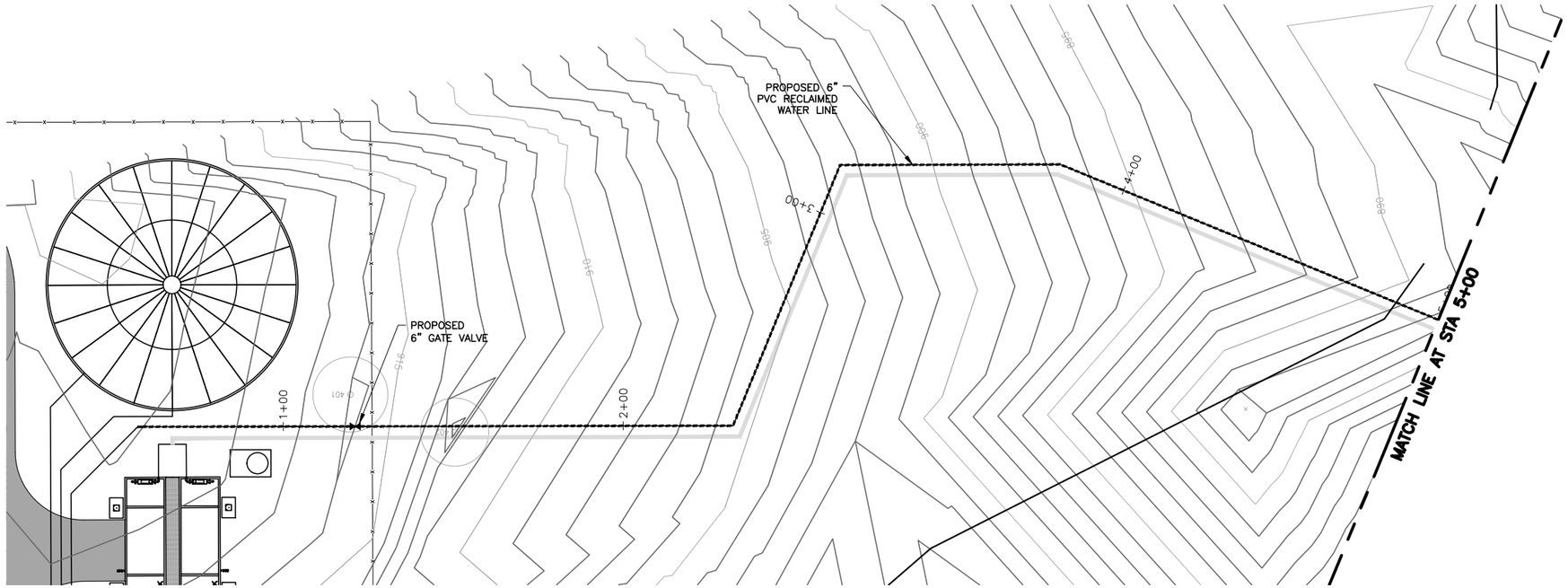

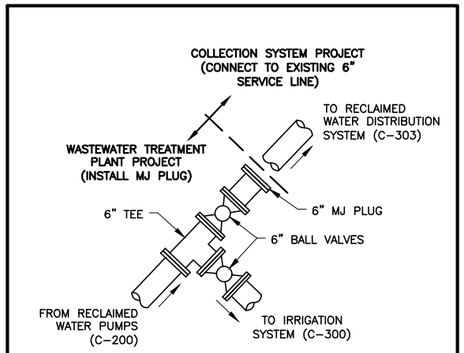

CONNECTION DETAIL

NOT TO SCALE

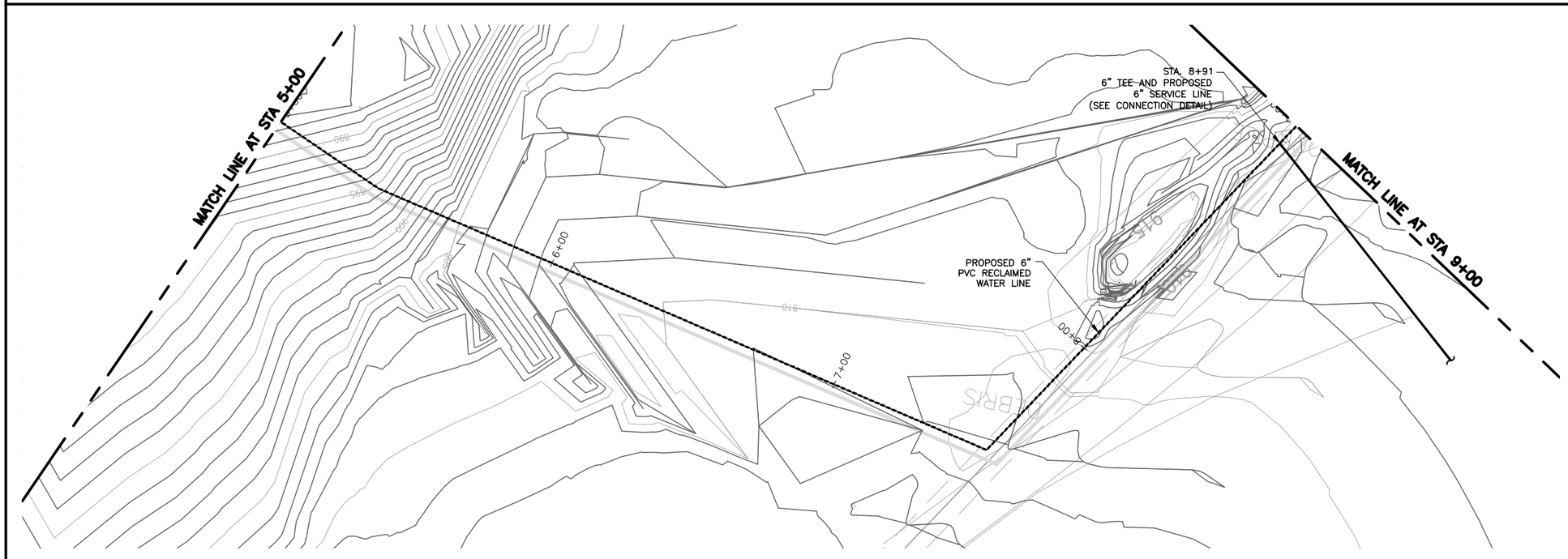

ALAN PLUMMER ASSOCIATES, INC.
ENVIRONMENTAL ENGINEERS AND SCIENTISTS
6300 LA CALMA DRIVE, SUITE 400
AUSTIN, TEXAS 78752-3843
PHONE: 512-452-5905 FAX: 512-452-2325
TEXAS REGISTERED ENGINEERING FIRM F-13

NO.	DATE	REVISION	BY

CITY OF WIMBERLEY
221 Stillwater
Wimberley, TX 78676

CITY OF WIMBERLEY
WASTEWATER TREATMENT PLANT AND COLLECTION SYSTEM PROJECT

RECLAIMED WATERLINE PLANS
RW LN A STA 1+00 TO STA 9+00

STATE OF TEXAS
STEPHEN J. COONAN
65516
PROFESSIONAL LICENSED ENGINEER
12/15/16

BAR IS ONE INCH ON ORIGINAL DRAWING.
ONE INCH

DESIGNED C. SYVARTH
DRAWN B. DICKMAN
CHECKED H. FRELS
REVIEWED S. COONAN

Seq. of

Dwg. No. C-302

1732-002-01

PRINTED: 12/14/2016 10:33 PM M:\Projects\1732\002-01\Acad\SHEETFILES\C-302 RW LN A.dwg SAVED: 12/14/2016 2:13 PM USER: Bauman,Brian

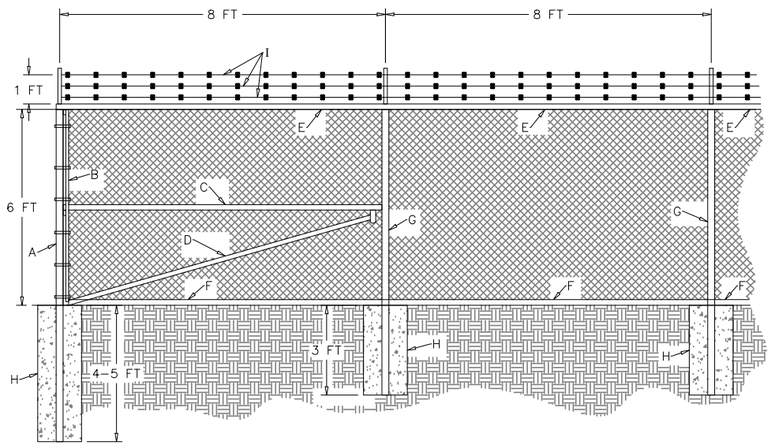

MATERIAL LIST		
I.D.	ITEM	DESCRIPTION
*A	CORNER POST, INTERMEDIATE BRACES AND GATE POST	CORNER AND INTERMEDIATE POST WILL BE STEEL 4" O.D. AT 9.11 LBS/LF GATE POST WILL BE STEEL PIPE (O.D. VARIES SEE SHEET 2 AND 3)
B	TENSION BAND	1/4" X 3/4" STEEL BAND
C	BRACE RAIL	STEEL PIPE 1 5/8" O.D. AT 2.27 LBS/LF
D	DIAGONAL TRUSS ROD	3/8" STEEL TRUSS ROD
E	TOP RAIL	RAIL 1 5/8" O.D. AT 2.27 LBS/LF
F	TENSION WIRE	7 GAUGE, COMPLY WITH ASTM A–824
G	LINE POST	STEEL PIPE 2 3/8" O.D. AT 3.65 LFS/LF
H	CONCRETE	5000 PSI CONCRETE AROUND THE POST. DIAMETER WILL BE A MINIMUM OF 4 TIMES THE POST O.D. DIAMETER. (ITEM "G" LINE POST 9.5" MIN. DIA.) (ITEM "A" CORNER POST AND INTERMEDIATE BRACES 16" MIN. DIA.) (ITEM "A" GATE POST DIA. VARIES SEE SHT 2 OF 3 AND SHT 3 OF 3)
I	BARBED WIRE	1 1/2 GAUGE GALVANIZED (CLASS II ASTM121)

*SEE NOTE 1

NOTE;

1. ALL ITEMS WILL BE THE SAME ON BOTH SIDES OF THE CORNER POST AND INTERMEDIATE BRACES. SEE DETAIL 701S–2 FOR GATE SIDE OF GATE POST.
2. IF CORNER POST ARE MORE THEN 100 FEET APART OR 100 FEET FROM GATE POST: INTERMEDIATE BRACES WILL BE USED IN INTERVALS NO GREATER THAN 100 FEET.
3. 6 FOOT 2 INCH DIAMOND MESH INTERWOVEN FABRIC (MAXIMUM OF 100 FEET LONG), 9 GAUGE (HEAVY DUTY COMMERCIAL) WILL BE TIED TO TOP RAIL, LINE POSTS, BRACE RAIL, TENSION WIRE AND TENSION BANDS WITH ALUMINUM ALLOY STEEL TIE WIRE AT 15 INCHES ON CENTER.
4. ALL FITTINGS WILL BE GALVANIZED STEEL (SLEEVES, BANDS, CLIPS, RAIL ENDS, TENSION BARS, FASTENERS,...ECT)

SECURITY FENCE (701S–1)

NOT TO SCALE

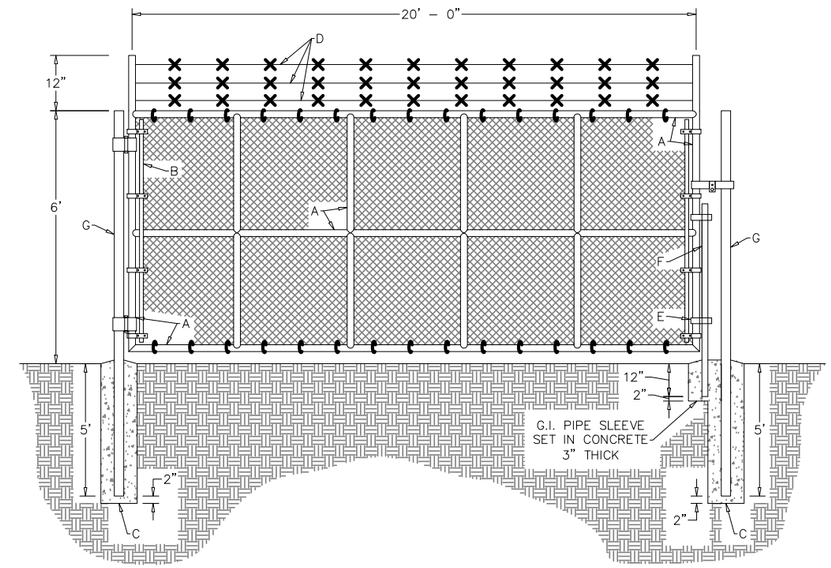

MATERIAL LIST		
I.D.	ITEM	DESCRIPTION
A	GATE FRAME	GATE FRAME SHALL BE 2 3/8 INCH SCHEDULE 40 GALVANIZED STEEL PIPE WITH CENTER AND CROSS BRACING OF SAME MATERIAL AT EQUAL SPACING WITH FULLY WELDED CONSTRUCTION
B	TENSION BAND	1/4" X 3/4" STEEL BAND
C	CONCRETE	5000 PSI CONCRETE AROUND THE POST. DIAMETER WILL BE A MINIMUM OF 4 TIMES THE POST O.D. (GATE POST (MAIN ENTRANCE) 34 1/2" MIN. DIA.)
D	BARBED WIRE	1 1/2 GAGE GALVANIZED (CLASS II ASTM121)
E	PLUNGER ROD GUIDE	2 REQUIRED
F	PLUNGER ROD	1 3/8 INCH O.D.
G	GATE POST	GATE POST WILL BE STEEL PIPE 8 5/8" O.D.

NOTE;

1. 6 FOOT 2 INCH DIAMOND MESH INTERWOVEN FABRIC, 9 GAUGE (HEAVY DUTY COMMERCIAL) WILL BE TIE TO TOP, BOTTOM AND BOTH VERTICAL AND HORIZONTAL CROSS BRACES OF THE FRAME WITH ALUMINUM ALLOY STEEL TIE WIRE AT 15 INCHES ON CENTER.
2. ALL FITTINGS WILL BE GALVANIZED STEEL (SLEEVES, BANDS, CLIPS, RAIL ENDS, TENSION BARS, FASTENERS, PLUNGER ROD, SCREW RESTRAINERS...ETC)
3. GATE HARDWARE: FORK LATCH WITH GRAVITY DROP; TWO 180 DEGREE GATE HINGES PER LEAF AND HARDWARE FOR PADLOCK.

SECURITY GATE (701S–2)

NOT TO SCALE

ALAN PLUMMER ASSOCIATES, INC.
ENVIRONMENTAL ENGINEERS AND SCIENTISTS
6300 LA CALMA DRIVE, SUITE 400
AUSTIN, TEXAS 78752-3843
PHONE: 512-452-5905 FAX: 512-452-2325
TEXAS REGISTERED ENGINEERING FIRM F-13

NO.	DATE	REVISION	BY

CITY OF WIMBERLEY
221 Stillwater
Wimberley, TX 78676

CITY OF WIMBERLEY
WASTEWATER TREATMENT PLANT AND COLLECTION SYSTEM PROJECT

STANDARD DETAILS
CIVIL I

STATE OF TEXAS
STEPHEN J. COONAN
65516
LICENSED PROFESSIONAL ENGINEER
12/15/16

BAR IS ONE INCH ON ORIGINAL DRAWING.
ONE INCH

DESIGNED APAI
DRAWN APAI
CHECKED APAI
REVIEWED APAI

Seq. of

Dwg. No. C–1000

1732–002–01

PRINTED: 12/14/2016 7:11 PM M:\Projects\1732\002-01\Acad\SHEETFILES\C-1000.dwg SAVED: 9/16/2016 8:31 AM USER: Dickman, Brian

PAVEMENT TYPE	A*
MEDIUM DUTY	8"
HEAVY DUTY	12"

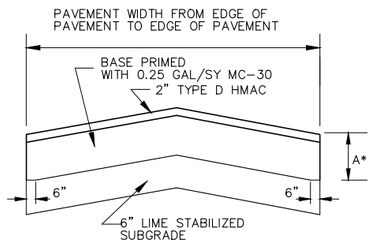

ASPHALTIC CONCRETE PAVEMENT (226)

NOT TO SCALE

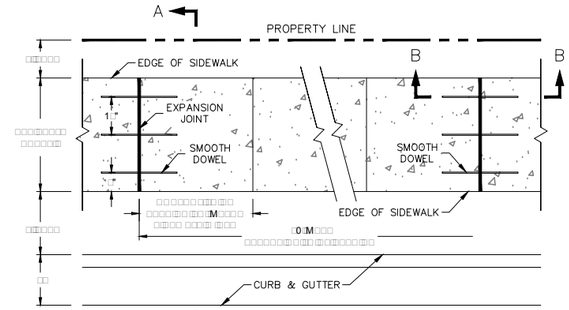

PLAN VIEW

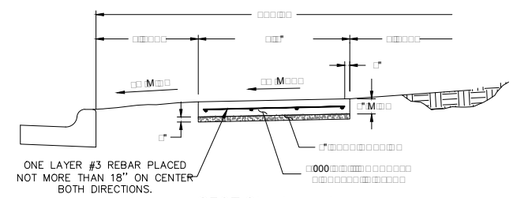

SECTION A – A

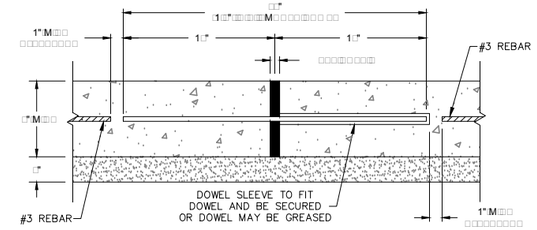

SECTION B– B

NOTES:

1. CONTROL JOINTS SHALL BE 1/4 INCH WIDE AND 3/4 INCH DEEP TOOLED OR SAW CUT INTO SIDEWALK.
2. CONSTRUCT 3/4" REDWOOD EXPANSION JOINTS AT MAXIMUM 40'– 0" SPACING ALONG LENGTH OF SIDEWALK. EXPANSION JOINTS SHALL INCLUDE SMOOTH DOWELS CENTERED TO THE JOINT AT 12" C–C.
3. IF SIDEWALK IS ADJOINED TO CURB, COLD JOINT IS REQUIRED, UNLESS APPROVED BY THE CITY INSPECTOR.
4. RAMPS AT INTERSECTION WILL FOLLOW CITY DETAIL 432S–3–SM.
5. MATERIALS AND CONSTRUCTION SHALL BE IN ACCORDANCE WITH CITY SPECIFICATIONS.
6. 4' SIDEWALK WILL HAVE A 5'X5' PAD A MINIMUM EVERY 200'

NOTES FOR REBAR PLACEMENT

1. REINFORCEMENT SHALL BE ACCURATELY PLACED AT SLAB MID–DEPTH AND HELD FIRMLY IN PLACE BY MEANS OF BAR SUPPORTS OF ADEQUATE STRENGTH AND NUMBER THAT WILL PREVENT DISPLACEMENT AND KEEP THE STEEL AT ITS PROPER POSITION DURING THE PLACEMENT OF THE P.C. CONCRETE.
2. IN NO INSTANCE SHALL THE STEEL BE PLACED DIRECTLY ON THE SUBGRADE, SAND CUSHION LAYER OR CLOSER THAN 2" TO THE OUT SIDE EDGE OF THE CONCRETE.

CONCRETE SIDEWALK (432S)

NOT TO SCALE

ALAN PLUMMER ASSOCIATES, INC.
ENVIRONMENTAL ENGINEERS AND SCIENTISTS
6300 LA CALMA DRIVE, SUITE 400
AUSTIN, TEXAS 78752-3843
PHONE: 512-452-5905 FAX: 512-452-2325
TEXAS REGISTERED ENGINEERING FIRM F-13

NO.	DATE	REVISION	BY

CITY OF WIMBERLEY
221 Stillwater
Wimberley, TX 78676

CITY OF WIMBERLEY
WASTEWATER TREATMENT PLANT AND COLLECTION SYSTEM PROJECT

STANDARD DETAILS
CIVIL II

STATE OF TEXAS
STEPHEN J. COONAN
65516
LICENSED PROFESSIONAL ENGINEER
12/15/16

BAR IS ONE INCH ON ORIGINAL DRAWING.
ONE INCH

DESIGNED APAI
DRAWN APAI
CHECKED APAI
REVIEWED APAI

Seq. of

Dwg. No. C–1001

1732–002–01

PRINTED: 12/14/2016 7:11 PM M:\Projects\1732\002-01\Acad\SHEETFILES\C-1001.dwg SAVED: 9/16/2016 10:41 AM USER: Dickman, Brian

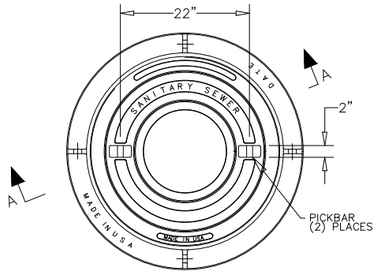

FRAME AND LID PLAN VIEW

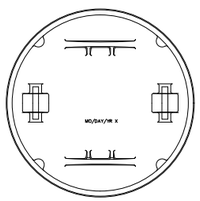

LID VIEW BOTTOM

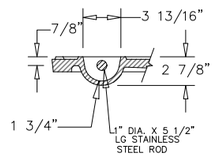

PICKBAR DETAIL

SHT 1 OF 2

The City of San Marcos Engineering and Capital Improvements	SANITARY SEWER MANHOLE RING AND COVER 32" – UNBOLTED	
RECORD COPY SIGNED BY LAURIE MOYER, P.E. 9/12/2016 ADOPTED	THE ARCHITECT/ENGINEER ASSUMES RESPONSIBILITY FOR APPROPRIATE USE OF THIS STANDARD	503S–4W–SM N.T.S. STANDARD DETAIL

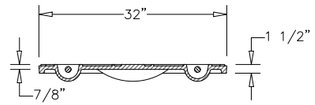

LID SECTION VIEW

SECTION A–A

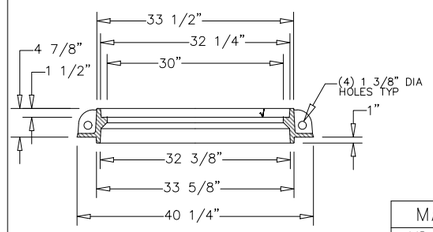

FRAME SECTION VIEW

SECTION A–A

MATERIALS	
LID	DUCTILE IRON
FRAME	GRAY IRON

NOTE:

1. THIS DETAIL IS FOR USE IN PUBLIC INFRASTRUCTURE ONLY. PRIVATE INFRASTRUCTURE WILL NOT HAVE CITY OF SAN MARCOS LOGO.
2. COVER SHALL BE EAST JORDAN IRON WORKS OR APPROVED EQUIVALENT.

SHT 2 OF 2

The City of San Marcos Engineering and Capital Improvements	SANITARY SEWER MANHOLE RING AND COVER 32" – UNBOLTED	
RECORD COPY SIGNED BY LAURIE MOYER, P.E. 9/12/2016 ADOPTED	THE ARCHITECT/ENGINEER ASSUMES RESPONSIBILITY FOR APPROPRIATE USE OF THIS STANDARD	503S–4W–SM N.T.S. STANDARD DETAIL

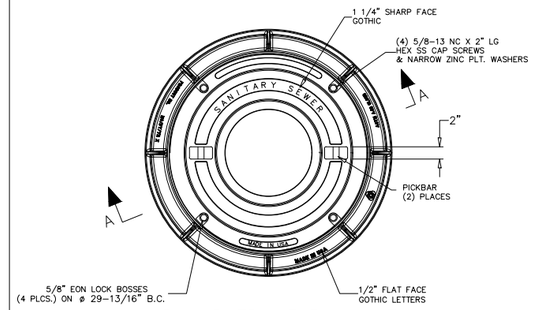

LID AND FRAME PLAN VIEW

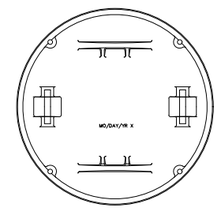

LID BOTTOM VIEW

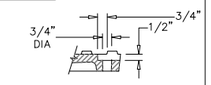

BOLT HOLE SECTION

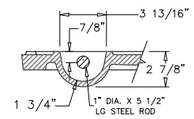

PICKBAR DETAIL

SHT 1 OF 2

The City of San Marcos Engineering and Capital Improvements	SANITARY SEWER MANHOLE RING AND COVER 32" –BOLTED	
RECORD COPY SIGNED BY LAURIE MOYER, P.E. 9/12/2016 ADOPTED	THE ARCHITECT/ENGINEER ASSUMES RESPONSIBILITY FOR APPROPRIATE USE OF THIS STANDARD	503S–5W–SM N.T.S. STANDARD DETAIL

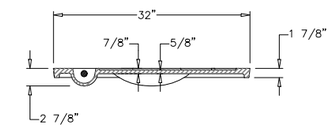

LID CROSS SECTION

SECTION A–A

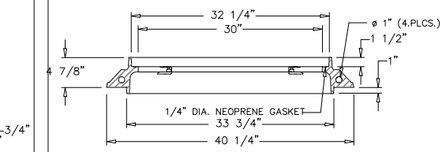

FRAME CROSS SECTION

SECTION A–A

MATERIALS	
LID	GRAY IRON
FRAME	GRAY IRON

NOTE:

1. THIS DETAIL IS FOR USE IN PUBLIC INFRASTRUCTURE ONLY. PRIVATE INFRASTRUCTURE WILL NOT HAVE CITY OF SAN MARCOS LOGO.
2. COVER SHALL BE EAST JORDAN IRON WORKS OR APPROVED EQUIVALENT.

SHT 2 OF 2

The City of San Marcos Engineering and Capital Improvements	SANITARY SEWER MANHOLE RING AND COVER 32" –BOLTED	
RECORD COPY SIGNED BY LAURIE MOYER, P.E. 9/12/2016 ADOPTED	THE ARCHITECT/ENGINEER ASSUMES RESPONSIBILITY FOR APPROPRIATE USE OF THIS STANDARD	503S–5W–SM N.T.S. STANDARD DETAIL

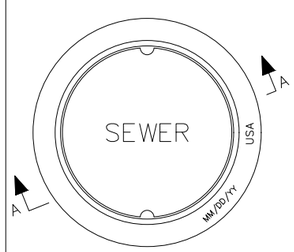

PLAN VIEW

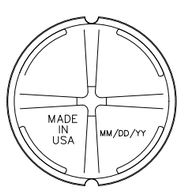

COVER BACK

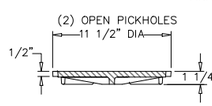

COVER SECTION

SECTION A–A

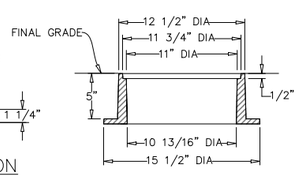

RING SECTION

SECTION A–A

NOTES:
1. COVER SHALL BE EAST JORDAN IRON WORKS OR APPROVED EQUIVALENT.

SHT 1 OF 1

The City of San Marcos Engineering and Capital Improvements	CLEANOUT RING AND COVER	
RECORD COPY SIGNED BY LAURIE MOYER, P.E. 9/12/2016 ADOPTED	THE ARCHITECT/ENGINEER ASSUMES RESPONSIBILITY FOR APPROPRIATE USE OF THIS STANDARD	503S–7W–SM N.T.S. STANDARD DETAIL

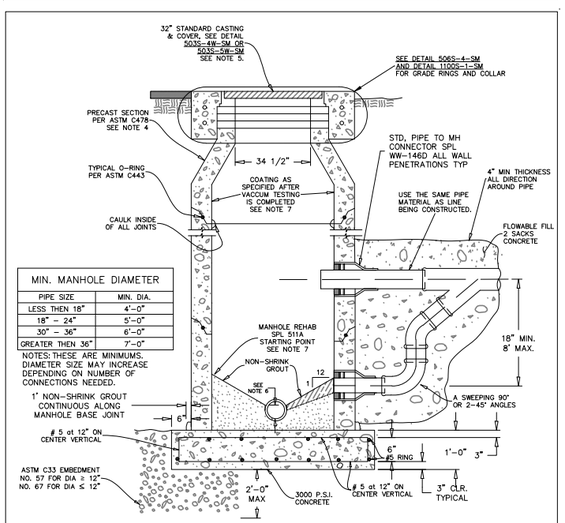

MIN. MANHOLE DIAMETER	
PIPE SIZE	MIN. DIA.
LESS THEN 18"	4'–0"
18" – 24"	5'–0"
30" – 36"	6'–0"
GREATER THEN 36"	7'–0"

NOTES: THESE ARE MINIMUMS. DIAMETER SIZE MAY INCREASE DEPENDING ON NUMBER OF CONNECTIONS NEEDED.

SECTION A–A OF SHEET 2

NOTES:
1. SEE PLANS FOR MANHOLE LOCATION, CONFIGURATION, PIPE SIZES AND TYPES.
2. SEE SPECIFICATIONS ON MATERIALS AND CONSTRUCTION.
3. MONOLITHIC MANHOLE TO BE CAST–IN–PLACE SHALL CONFORM TO ASTM SPECIFICATION C478 FOR MATERIALS AND DESIGN. MANUFACTURER TO PROVIDE DETAILS.
4. MANHOLES FOR MAINS 24" AND LARGER SHALL HAVE ECCENTRIC RISER SECTIONS.
5. IF IN 100 YEAR FLOOD PLAIN USE MANHOLE COVER DETAIL 503S–5W–SM (BOLTED)
6. DEPTH OF U CHANNEL WILL BE 3/4 THE DIAMETER OF PIPES 24" OR LESS AND WILL BE THE DIAMETER OF PIPES GREATER THEN 24"
7. MANHOLE COATING LIMITS – COAT ALL OF THE MANHOLE WALLS
   AT TOP OF MANHOLE: SEE DETAIL 506S–4–SM FOR END LOCATION AT GRADE RINGS
   AT BOTTOM OF MANHOLE:
   NEW MANHOLES – COAT PER SPL 511; INCLUDING THE BOTTOM OF INVERT
   MANHOLE REHABILITATION – COAT PER SPL 511A; EXCLUDING THE BOTTOM OF INVERT

SHT 1 OF 3

The City of San Marcos Engineering and Capital Improvements	PRECAST MANHOLE WITH DROP INLET ON PRECAST BASE	
RECORD COPY SIGNED BY LAURIE MOYER, P.E. 9/12/2016 ADOPTED	THE ARCHITECT/ENGINEER ASSUMES RESPONSIBILITY FOR APPROPRIATE USE OF THIS STANDARD	506S–8–SM N.T.S. STANDARD DETAIL

INVERT DETAIL

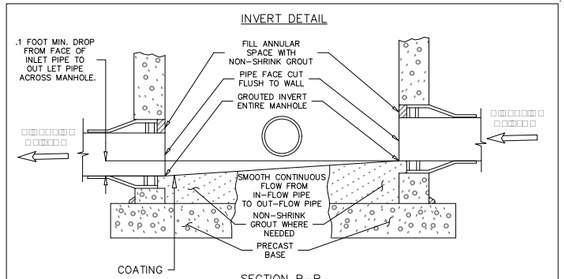

SECTION B–B

INVERT PLAN VIEW

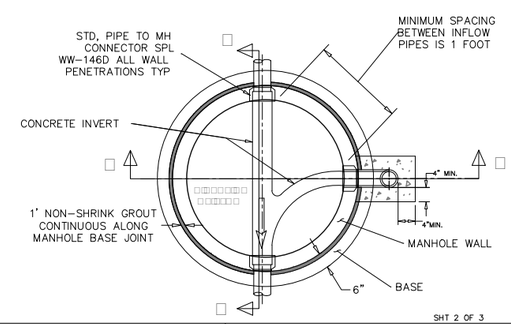

SHT 2 OF 3

The City of San Marcos Engineering and Capital Improvements	PRECAST MANHOLE WITH DROP INLET ON PRECAST BASE	
RECORD COPY SIGNED BY LAURIE MOYER, P.E. 9/12/2016 ADOPTED	THE ARCHITECT/ENGINEER ASSUMES RESPONSIBILITY FOR APPROPRIATE USE OF THIS STANDARD	506S–8–SM N.T.S. STANDARD DETAIL

STANDARD DROP CONNECTIONS
MINIMUM DIMENSIONS
(FOR INFORMATION ONLY)

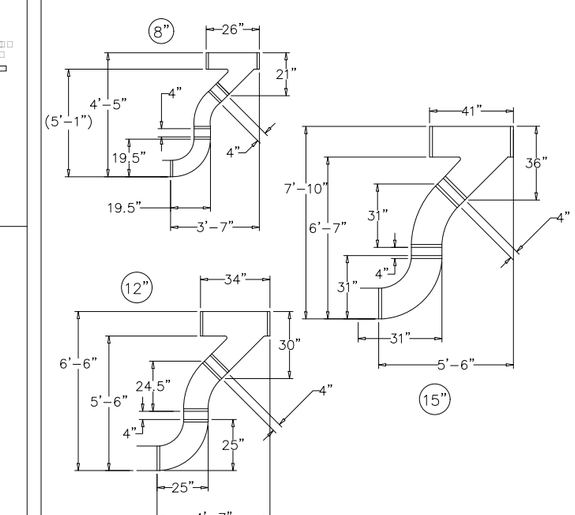

REFERENCES
DETAIL 503S–4W–SM
DETAIL 503S–5W–SM
DETAIL 506S–4–SM
DETAIL 1100S–1–SM

SHT 3 OF 3

The City of San Marcos Engineering and Capital Improvements	PRECAST MANHOLE WITH DROP INLET ON PRECAST BASE	
RECORD COPY SIGNED BY LAURIE MOYER, P.E. 9/12/2016 ADOPTED	THE ARCHITECT/ENGINEER ASSUMES RESPONSIBILITY FOR APPROPRIATE USE OF THIS STANDARD	506S–8–SM N.T.S. STANDARD DETAIL

ALAN PLUMMER ASSOCIATES, INC.
ENVIRONMENTAL ENGINEERS AND SCIENTISTS
6500 LA CALMA DRIVE, SUITE 400
AUSTIN, TEXAS 78752-3843
PHONE: 512-452-5905 FAX: 512-452-2325
TEXAS REGISTERED ENGINEERING FIRM F-13

NO.	DATE	REVISION	BY

CITY OF WIMBERLEY
221 Stillwater
Wimberley, TX 78676

CITY OF WIMBERLEY
WASTEWATER TREATMENT PLANT AND COLLECTION SYSTEM PROJECT

STANDARD DETAILS
CIVIL III

STATE OF TEXAS
STEPHEN J. COONAN
65516
LICENSED PROFESSIONAL ENGINEER
12/15/16

BAR IS ONE INCH ON ORIGINAL DRAWING.
ONE INCH

DESIGNED APAI
DRAWN APAI
CHECKED APAI
REVIEWED APAI

Seq. of

Dwg. No. C–1002

1732–002–01

PRINTED: 12/14/2016 7:12 PM M:\Projects\1732\002-01\Acad\SHEETFILES\C-1002.dwg SAVED: 9/16/2016 10:41 AM USER: Dickman, Brian

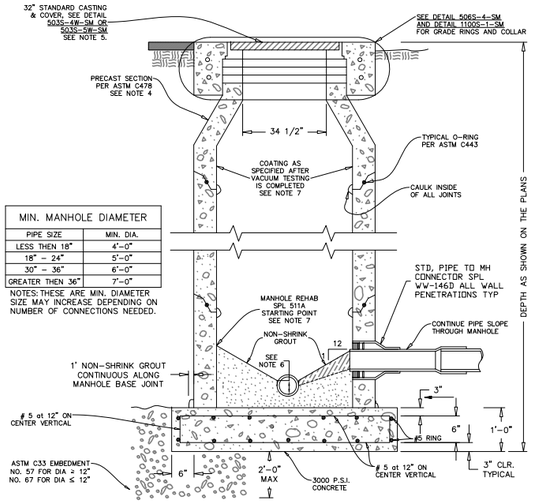

MIN. MANHOLE DIAMETER	
PIPE SIZE	MIN. DIA.
LESS THEN 18"	4'-0"
18" – 24"	5'-0"
30" – 36"	6'-0"
GREATER THEN 36"	7'-0"

NOTES: THESE ARE MIN. DIAMETER SIZE MAY INCREASE DEPENDING ON NUMBER OF CONNECTIONS NEEDED.

SECTION A–A OF SHEET 2

NOTES:
1. SEE PLANS FOR MANHOLE LOCATION, CONFIGURATION, PIPE SIZES AND TYPES.
2. SEE SPECIFICATIONS ON MATERIALS AND CONSTRUCTION.
3. MONOLITHIC MANHOLE TO BE CAST-IN-PLACE SHALL CONFORM TO ASTM SPECIFICATION C478 FOR MATERIALS AND DESIGN. MANUFACTURER TO PROVIDE DETAILS.
4. MANHOLES FOR MAINS 24" AND LARGER SHALL HAVE ECCENTRIC RISER SECTIONS.
5. IF IN 100 YEAR FLOOD PLAIN USE MANHOLE COVER DETAIL 503S-5W-SM (BOLTED).
6. DEPTH OF U CHANNEL WILL BE 3/4 THE DIAMETER OF PIPES 24" OR LESS AND WILL BE THE DIAMETER OF PIPES GREATER THEN 24"
7. MANHOLE COATING LIMITS – COAT ALL OF THE MANHOLE WALLS
   AT TOP OF MANHOLE: SEE DETAIL 506S-4-SM FOR END LOCATION AT GRADE RINGS
   AT BOTTOM OF MANHOLE:
   NEW MANHOLES – COAT PER SPL 511; INCLUDING THE BOTTOM OF INVERT
   MANHOLE REHABILITATION – COAT PER SPL 511A; EXCLUDING THE BOTTOM OF INVERT

SHT 1 OF 2

The City of San Marcos Engineering and Capital Improvements	WASTEWATER MANHOLE ON PRECAST BASE	
RECORD COPY SIGNED BY 9/13/2016 ADOPTED LAURIE MOYER, P.E.	THE ARCHITECT/ENGINEER ASSUMES RESPONSIBILITY FOR APPROPRIATE USE OF THIS STANDARD	506S–10–SM N.T.S. STANDARD DETAIL

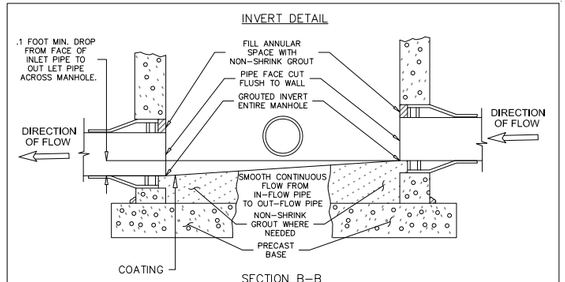

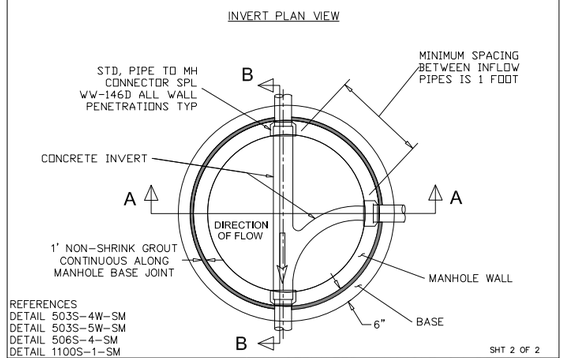

REFERENCES
DETAIL 503S–4W–SM
DETAIL 503S–5W–SM
DETAIL 506S–4–SM
DETAIL 1100S–1–SM

SHT 2 OF 2

The City of San Marcos Engineering and Capital Improvements	WASTEWATER MANHOLE ON PRECAST BASE	
RECORD COPY SIGNED BY 9/13/2016 ADOPTED LAURIE MOYER, P.E.	THE ARCHITECT/ENGINEER ASSUMES RESPONSIBILITY FOR APPROPRIATE USE OF THIS STANDARD	506S–10–SM N.T.S. STANDARD DETAIL

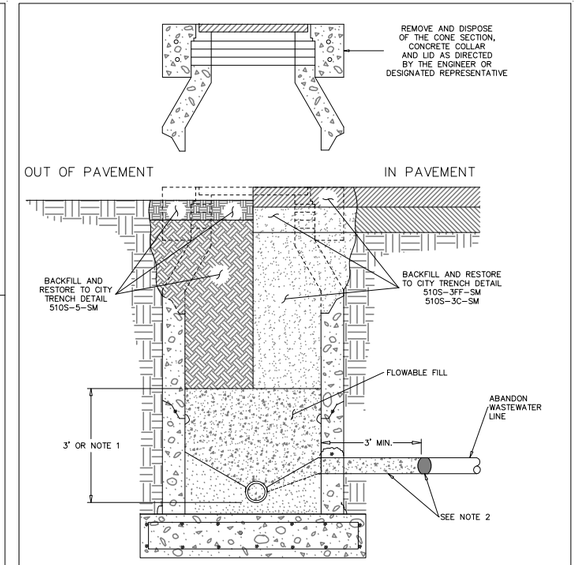

NOTES:
1. IF THE INVERT IS LESS THAN 3' FROM TOP OF GRADE STOP FLOWABLE FILL AT BOTTOM OF PAVING SUBGRADE OR 6" BELOW NATURAL GROUND.
2. PUSH APPROPRIATE SANDBAG OR APPROVED PLUG A MINIMUM OF 3 FEET INTO THE PIPE TO BE ABANDONED BEFORE FILLING PIPE COMPLETELY WITH FLOWABLE FILL.

REFERENCES
DETAIL 510S–3C–SM
DETAIL 510S–3FF–SM
DETAIL 510S–5–SM

SHT 1 OF 1

The City of San Marcos Engineering and Capital Improvements	MANHOLE ABANDONMENT	
RECORD COPY SIGNED BY 9/13/2016 ADOPTED LAURIE MOYER, P.E.	THE ARCHITECT/ENGINEER ASSUMES RESPONSIBILITY FOR APPROPRIATE USE OF THIS STANDARD	506S–15–SM N.T.S. STANDARD DETAIL

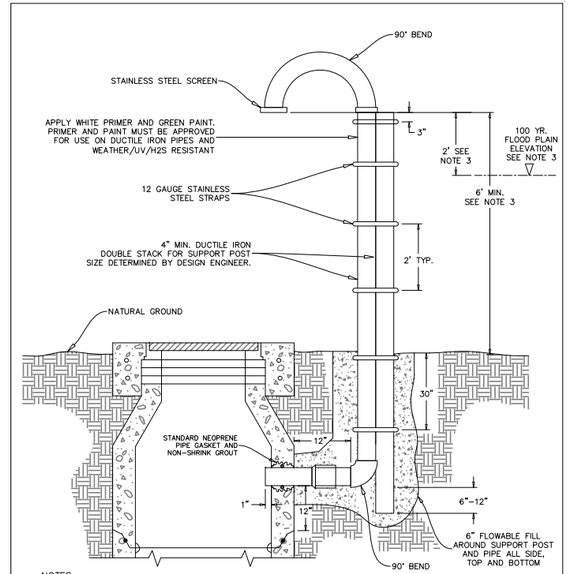

NOTES:
1. NOT ALLOWED ON MANHOLES IN PAVEMENT
2. MANHOLE VENT TO BE USED ONLY WHEN REQUIRED BY TCEQ OR CITY.
3. THE BOTTOM OF STEEL SCREEN WILL BE THE GREATER OF:
   A. 6 FEET ABOVE GROUND ELEVATION
   B. 2 FEET ABOVE THE 100 YEAR FLOOD PLAIN
4. SEE CITY STANDARD MANHOLE DETAIL FOR MANHOLE INSTALLATION.

SHT 1 OF 1

The City of San Marcos Engineering and Capital Improvements	MANHOLE VENT	
RECORD COPY SIGNED BY 9/13/2016 ADOPTED LAURIE MOYER, P.E.	THE ARCHITECT/ENGINEER ASSUMES RESPONSIBILITY FOR APPROPRIATE USE OF THIS STANDARD	506S–MV–SM N.T.S. STANDARD DETAIL

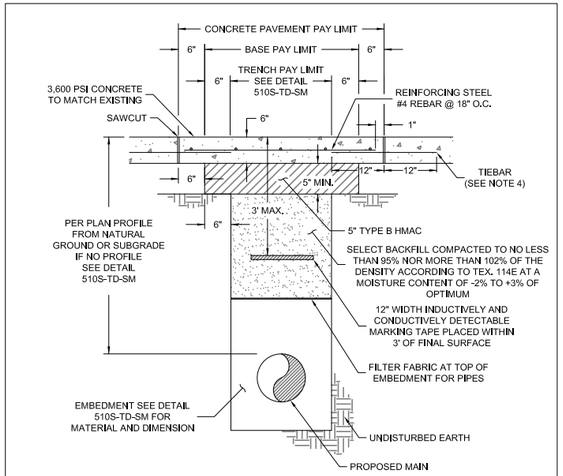

NOTES:
1. THE EXISTING PAVED SURFACE SHALL BE SAW CUT IN A STRAIGHT LINE A MINIMUM OF 12" WIDER THAN THE UNDISTURBED SIDES OF THE TRENCH, SYMMETRICAL ABOUT THE CENTER LINE OF THE EXCAVATION.
2. IF EXCAVATION AREA IS OPEN FOR TEMPORARY PUBLIC USE SEE DETAIL 510S–3T–SM.
3. ALL DAMAGED AREAS OF PAVEMENT OUTSIDE THE TRENCH CUT SHALL BE REMOVED AND REPLACED WITH MINIMUM OF 6" OF BASE OR MATCH EXISTING THICKNESS, WHICHEVER IS GREATER.
4. TIEBARS WILL BE #4 REBAR PLACED EVERY 18' MID DEPTH OF EXISTING CONCRETE ON ALL SIDES OF TRENCH OR PER INSPECTORS RECOMMENDATION.

REFERENCES
DETAIL 510S–TD–SM
DETAIL 510S–3T–SM

SHT 1 OF 1

The City of San Marcos Engineering and Capital Improvements	TYPICAL TRENCH WITH CONCRETE PAVEMENT	
RECORD COPY SIGNED BY 3/3/2016 ADOPTED LAURIE MOYER, P.E.	THE ARCHITECT/ENGINEER ASSUMES RESPONSIBILITY FOR APPROPRIATE USE OF THIS STANDARD.	STANDARD NO. 510S–3C–SM 1 OF 1

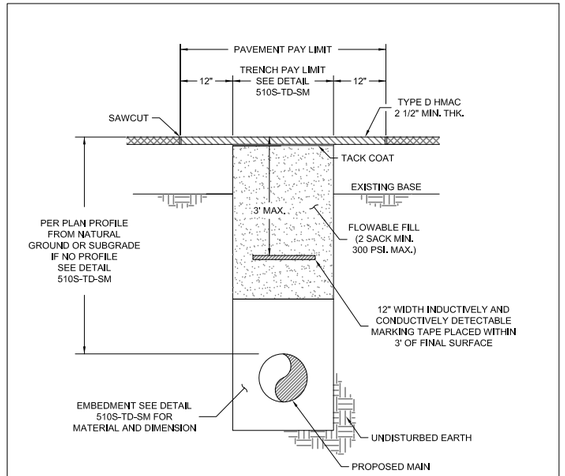

NOTES:
1. THE EXISTING PAVED SURFACE SHALL BE SAW CUT IN A STRAIGHT LINE A MINIMUM OF 12" WIDER THAN THE UNDISTURBED SIDES OF THE TRENCH, SYMMETRICAL ABOUT THE CENTER LINE OF THE EXCAVATION.
2. IF EXCAVATION AREA IS OPEN FOR TEMPORARY PUBLIC USE, SEE DETAIL 510S–3T–SM.
3. ALL DAMAGED AREAS OF PAVEMENT OUTSIDE THE TRENCH CUT SHALL BE REMOVED AND REPLACED WITH MINIMUM OF 8" OF BASE OR MATCH EXISTING THICKNESS AND 2 1/2" HMAC, WHICHEVER IS GREATER.

REFERENCES
DETAIL 510S–TD–SM
DETAIL 510S–3T–SM

SHT 1 OF 1

The City of San Marcos Engineering and Capital Improvements	STREET TRENCH FLOWABLE FILL	
RECORD COPY SIGNED BY 3/3/2016 ADOPTED LAURIE MOYER, P.E.	THE ARCHITECT/ENGINEER ASSUMES RESPONSIBILITY FOR APPROPRIATE USE OF THIS STANDARD.	STANDARD NO. 510S–3FF–SM 1 OF 1

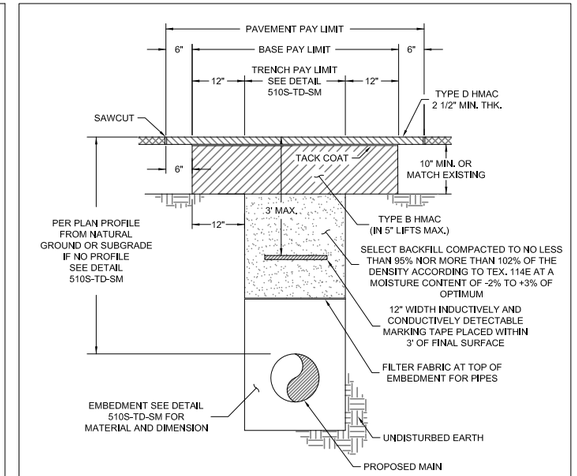

NOTES:
1. THE EXISTING PAVED SURFACE SHALL BE SAW CUT IN A STRAIGHT LINE A MINIMUM OF 12" WIDER THAN THE UNDISTURBED SIDES OF THE TRENCH, SYMMETRICAL ABOUT THE CENTER LINE OF THE EXCAVATION.
2. IF EXCAVATION AREA IS OPEN FOR TEMPORARY PUBLIC USE, SEE DETAIL 510S–3T–SM.
3. ALL DAMAGED AREAS OF PAVEMENT OUTSIDE THE TRENCH CUT SHALL BE REMOVED AND REPLACED.
4. ROAD BASE AND SURFACE MATERIALS IN THE TRENCH CUT SHALL BE REPLACED IN KIND OF EQUAL THICKNESS, OR MINIMUM BASE THICKNESS OF 10", WHICHEVER IS GREATER.

REFERENCES
DETAIL 510S–TD–SM
DETAIL 510S–3T–SM

SHT 1 OF 1

The City of San Marcos Engineering and Capital Improvements	TYPICAL TRENCH WITH PAVED SURFACE	
RECORD COPY SIGNED BY 3/3/2016 ADOPTED LAURIE MOYER, P.E.	THE ARCHITECT/ENGINEER ASSUMES RESPONSIBILITY FOR APPROPRIATE USE OF THIS STANDARD.	STANDARD NO. 510S–3–SM 1 OF 1

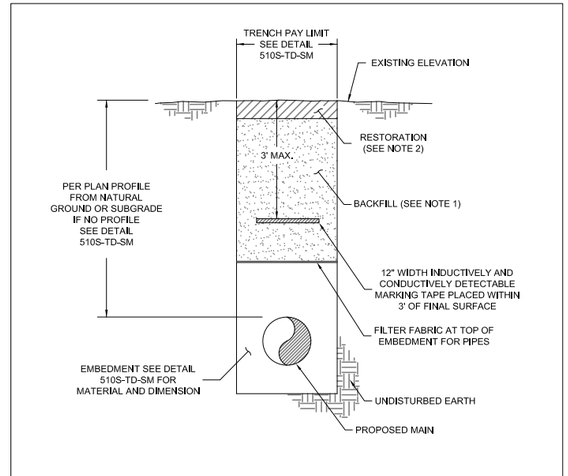

NOTES:
1. IN AND NEAR FLOOD PLAIN OF ALL STREAMS AND WATERCOURSES, UNDER OR ADJACENT TO UTILITIES, STRUCTURES, TWO FEET FROM PAVEMENT ETC. SELECT BACKFILL WILL BE COMPACTED TO NO LESS THAN 95% NOR MORE THAN 102% OF THE DENSITY ACCORDING TO TEX. 114E AT A MOISTURE CONTENT OF -2% TO +3% OF OPTIMUM, UNLESS OTHERWISE DIRECTED BY CITY. ALL OTHER LOCATIONS WILL BE COMPACTED TO 90% OF MAX DENSITY.
2. RESTORE ALL DISTURBED SURFACES ABOVE AND SURROUNDING THE TRENCH TO EXISTING CONDITION AND ELEVATION. NATURAL GROUND WILL HAVE 6" OF TOP SOIL, SEEDED AND A RETENTION BLANKET INSTALLED ON TOP. ALL OTHER SURFACE STRUCTURES SHALL BE REPLACED TO MATCH EXISTING CONDITIONS.

REFERENCES
DETAIL 510S–TD–SM

SHT 1 OF 1

The City of San Marcos Engineering and Capital Improvements	TRENCH DETAIL NATURAL GROUND	
RECORD COPY SIGNED BY 3/3/2016 ADOPTED LAURIE MOYER, P.E.	THE ARCHITECT/ENGINEER ASSUMES RESPONSIBILITY FOR APPROPRIATE USE OF THIS STANDARD.	STANDARD NO. 510S–5–SM 1 OF 1

ALAN PLUMMER ASSOCIATES, INC.
ENVIRONMENTAL ENGINEERS AND SCIENTISTS
6300 LA CALMA DRIVE, SUITE 400
AUSTIN, TEXAS 78752-3843
PHONE: 512-452-5905 FAX: 512-452-2325
TEXAS REGISTERED ENGINEERING FIRM F-13

NO.	DATE	REVISION	BY

CITY OF WIMBERLEY
221 Stillwater
Wimberley, TX 78676

CITY OF WIMBERLEY
WASTEWATER TREATMENT PLANT AND COLLECTION SYSTEM PROJECT

STANDARD DETAILS
CIVIL IV

STATE OF TEXAS
STEPHEN J. COONAN
65516
LICENSED PROFESSIONAL ENGINEER
12/15/16

BAR IS ONE INCH ON ORIGINAL DRAWING.
ONE INCH

DESIGNED APAI
DRAWN APAI
CHECKED APAI
REVIEWED APAI
Seq. of
Dwg. No. C–1003
1732–002–01

PRINTED: 12/15/2016 1:37 PM M:\Projects\1732\002-01\Acad\SHEETFILES\C-1003.dwg SAVED: 9/16/2016 10:41 AM USER: Dickman, Brian

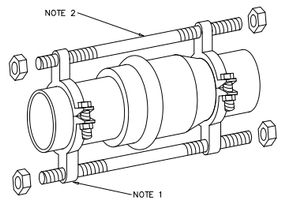

TYPICAL RESTRAINT

EXAMPLE:

JOINT RESTRAINT TABLE			
JOINT (TYPE)	PIPE MATERIAL	PIPE SIZE	RESTRAINT DISTANCE
JOINT (A) SEE NOTE 5	MATERIAL (B)	SIZE (C)	RESTRAINT DISTANCE (X)

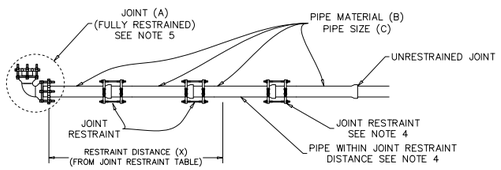

NOTES:

1. ALL JOINT RESTRAINTS WILL BE PER CURRENT CITY OF SAN MARCOS STANDARD PRODUCT LIST.
2. ALL BELL JOINTS RESTRAINTS AND METAL PIPES WILL BE WRAPPED IN 8 MIL POLY.
3. A JOINT RESTRAINT TABLE FOR ALL FITTINGS WILL BE SUBMITTED WITH PLANS.
4. PIPES THAT ARE WITHIN THE DISTANCE REQUIRING RESTRAINTS FROM THE SUBMITTED JOINT RESTRAINT TABLE WILL BE RESTRAINED ON BOTH ENDS OF THE PIPE.
5. JOINT RESTRAINT TABLE MUST INCLUDE ALL JOINTS AND FITTINGS THAT RESTRICT THE FLOW OF WATER THAT ARE IN THE PLAN SET INCLUDING BUT NOT LIMITED TO: (BENDS, TEES, CROSSES, VALVES, DEAD ENDS, REDUCERS...ETC)

The City of San Marcos
Engineering and Capital Improvements

PIPE RESTRAINT BELL JOINTS

RECORD COPY SIGNED BY — LAURIE MOYER, P.E. — 9/13/2016 ADOPTED

THE ARCHITECT/ENGINEER ASSUMES RESPONSIBILITY FOR APPROPRIATE USE OF THIS STANDARD

N.T.S. — 510S–PR–SM — STANDARD DETAIL

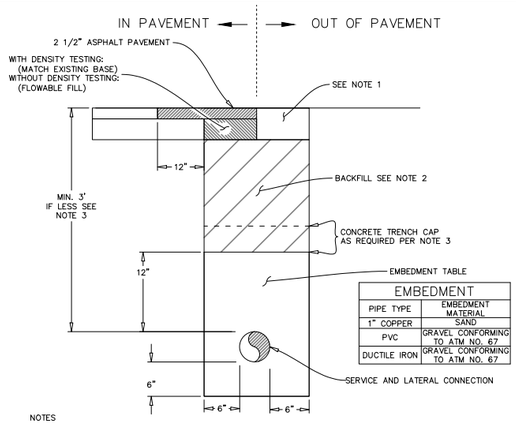

EMBEDMENT	
PIPE TYPE	EMBEDMENT MATERIAL
1" COPPER	SAND
PVC	GRAVEL CONFORMING TO ATM NO. 67
DUCTILE IRON	GRAVEL CONFORMING TO ATM NO. 67

NOTES

1. THIS RESTORATION WORK IS SUBSIDIARY TO SERVICE OR LATERAL WORK:
   IN PAVEMENT
   RESTORE PER THIS DETAIL
   OUT OF PAVEMENT
   NATURAL GROUND – WILL HAVE 6" OF TOP SOIL AND BE REVEGETATED.
   ALL OTHER CONDITIONS – RESTORE ALL DISTURBED SURFACES TO EXISTING CONDITION AND ELEVATION
2. SELECT BACKFILL:
   UNDER PAVEMENT – WITH DENSITY TESTING:
   SELECT BACKFILL COMPACTED TO NO LESS THAN 95% OF MAXIMUM DENSITY AND NO MORE THAN 102% ACCORDING TO TEX. 114E AT A MOISTURE CONTENT OF –2% TO +3% OF OPTIMUM.
   UNDER PAVEMENT – WITHOUT DENSITY TESTING:
   FLOWABLE FILL.
   OUT OF PAVEMENT:
   SELECT BACKFILL COMPACTED TO 90% OF MAX DENSITY.
3. WHEN DEPTH OF COVER IS LESS THAN 3' FROM EXISTING OR PROPOSED SURFACE A CONCRETE TRENCH CAP WILL BE INSTALLED WITH A MINIMUM THICKNESS OF 6" CLASS A (3000 PSI) CONCRETE PLACED ABOVE EMBEDMENT AS DEPICTED IN THIS DETAIL. THICKNESS WILL BE DETERMINED BY ENGINEER AND NOT BE LESS THAN A MINIMUM OF 6".
4. BACKFILL AND EMBEDMENT WILL BE SUBSIDIARY TO THE SERVICE OR LATERAL WORK.

The City of San Marcos
Engineering and Capital Improvements

SERVICE AND LATERAL CONNECTION TRENCH DETAIL

RECORD COPY SIGNED BY — LAURIE MOYER, P.E. — 9/13/2016 ADOPTED

THE ARCHITECT/ENGINEER ASSUMES RESPONSIBILITY FOR APPROPRIATE USE OF THIS STANDARD

N.T.S. — 510S–S&L–SM — STANDARD DETAIL

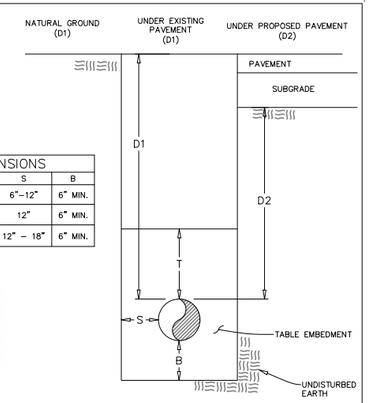

EMBEDMENT DIMENSIONS				
	SIZE	T	S	B
NON STORM PIPE	ALL	12"	6"–12"	6" MIN.
STORM PIPE	42" OR LESS	12"	12"	6" MIN.
	GREATER THAN 42"	12"	12" – 18"	6" MIN.

EMBEDMENT	
MATERIALS	PIPE SIZE
ASTM C30 EMBEDMENT NO. 57	GREATER THAN 12"
ASTM C30 EMBEDMENT NO. 67	12" OR LESS
SAND	1" COPPER

MINIMUM DEPTH OF COVER					
PIPE TYPE	SIZE	(D1) UNDER PAVEMENT	(D1) NATURAL GROUND	(D1) LESS THAN 3' OF COVER	(D2 – NOTE 2) UNDER PROPOSED ROAD
WATER	12" OR LESS	48" MIN.	36" MIN.	24" MIN. AND USE CONCRETE FLOWABLE FILL DETAIL	36" BELOW SUBGRADE
	16" OR GREATER	48" MIN.	48" MIN.	NOT ALLOWED	36" BELOW SUBRADE
WASTEWATER	ALL	60" MIN.	36" MIN.	DUCTILE IRON WILL BE USED. FLOWABLE FILL DETAIL WHERE EROSION MAY OCCUR	48" MIN. BELOW SUBGRADE
RECLAIMED WATER	ALL	48" MIN.	36" MIN.	24" MIN. AND USE CONCRETE FLOWABLE FILL DETAIL	36" MIN. BELOW SUBGRADE
STORM	ALL	MANUFACTURER'S SPECIFICATION MINIMUM AND MAXIMUM DEPTH OF COVER WILL BE USED FOR STORM PIPES			

NOTE

1. ALL MEASUREMENTS ARE FROM OUTSIDE PIPE DIAMETER
2. FOR TABLE "MINIMUM DEPTH OF COVER" COLUMN "UNDER PROPOSED ROAD" IF D1 FROM COLUMN "UNDER PAVEMENT" PLACES THE PIPE LOWER THAN D2. THEN D1 FROM "UNDER PAVEMENT" WILL BE USED FOR MINIMUM DEPTH OF COVER.

The City of San Marcos
Engineering and Capital Improvements

UTILITY TRENCH DIMENSIONS

RECORD COPY SIGNED BY — LAURIE MOYER, P.E. — 9/13/2016 ADOPTED

THE ARCHITECT/ENGINEER ASSUMES RESPONSIBILITY FOR APPROPRIATE USE OF THIS STANDARD

N.T.S. — 510S–TD–SM — STANDARD DETAIL

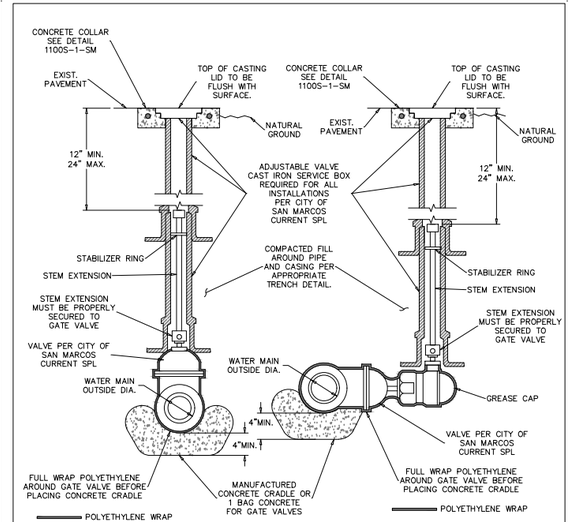

VERTICAL VALVE — HORIZONTAL VALVE

NOTE:

1. LID MUST SAY "WATER" FOR A WATERLINE, "SEWER" FOR NONPOTABLE LINES OR "RECLAIM" FOR RECLAIMED WATER.

REFERENCES
DETAIL 1100S–1–SM

The City of San Marcos
Engineering and Capital Improvements

TYPICAL GATE VALVE 2"–24"

RECORD COPY SIGNED BY — LAURIE MOYER, P.E. — 9/13/2016 ADOPTED

THE ARCHITECT/ENGINEER ASSUMES RESPONSIBILITY FOR APPROPRIATE USE OF THIS STANDARD

N.T.S. — 511S–7–SM — STANDARD DETAIL

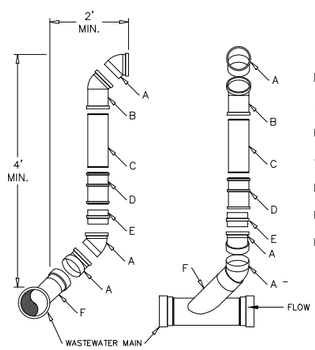

NOTE

A – 45 DEGREE BEND

B – DEEP SOCKET 45 DEGREE BEND

C – SDR 26/35 PIPE

D – CONTROLLED SETTLEMENT JOINT

E – RISER ADAPTER

F – REDUCING WYE

DROP DOWN CONNECTION

NOTES

1. FOR CONNECTION AT PROPERTY LINE SEE DETAIL 520S–1–SM AND 520S–3–SM.
2. THE MINIMUM SLOPE AND DEPTH TO DROP DOWN CONNECTION CANNOT BE LESS THAN DETAIL 520S–1–SM AND 520S–3–SM FROM BACK OF CURB TO DROP DOWN CONNECTION.
3. VERIFY THAT THE ABOVE NOTES AND DIMENSIONS CAN BE MET BEFORE USING DROP DOWN CONNECTION.
4. FOR WASTEWATER MAINS WITH LESS THAN 8 FEET OF COVER DROP DOWN CONNECTION WILL WILL NOT BE USED.

REFERENCES
DETAIL 520S–1–SM
DETAIL 520S–3–SM

The City of San Marcos
Engineering and Capital Improvements

WASTEWATER DEEP LATERAL CONNECTION DETAIL

RECORD COPY SIGNED BY — LAURIE MOYER, P.E. — 9/13/2016 ADOPTED

THE ARCHITECT/ENGINEER ASSUMES RESPONSIBILITY FOR APPROPRIATE USE OF THIS STANDARD

N.T.S. — 520–6–SM — STANDARD DETAIL

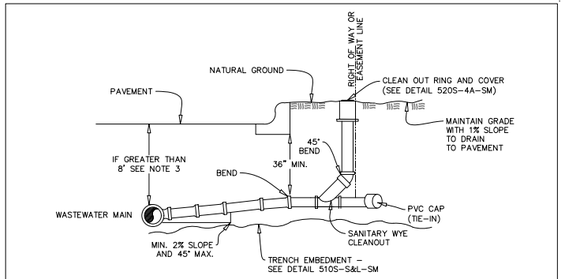

STANDARD CONNECTION

NOTE

1. THE PIPE WILL BE SLOPED NO MORE THAN 45° FROM HORIZONTAL AND HAVE A MINIMUM SLOPE OF 2% TO MAIN FROM BACK OF CURB.
2. CONNECTION JOINTS BEFORE AND AFTER BEND WILL NOT HAVE MORE THAN 5° DEFLECTION TO ACHIEVE THE REQUIRED SLOPE/ANGLE.
3. FOR MAINS THAT HAVE MORE THAN 8 FEET OF COVER MAINTAIN MINIMUM SLOPE TO WASTEWATER MAIN AND USE DETAIL 520–6–SM TO CONNECT TO WASTEWATER MAIN.

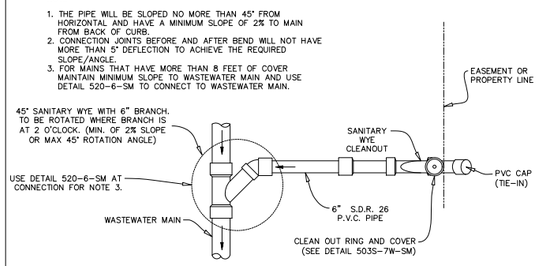

PLAN VIEW

REFERENCES
DETAIL 510S–S&L–SM
DETAIL 520–4A–SM
DETAIL 520–6–SM

The City of San Marcos
Engineering and Capital Improvements

SINGLE LATERAL CONNECTION

RECORD COPY SIGNED BY — LAURIE MOYER, P.E. — 9/13/2016 ADOPTED

THE ARCHITECT/ENGINEER ASSUMES RESPONSIBILITY FOR APPROPRIATE USE OF THIS STANDARD

N.T.S. — 520S–1–SM — STANDARD DETAIL

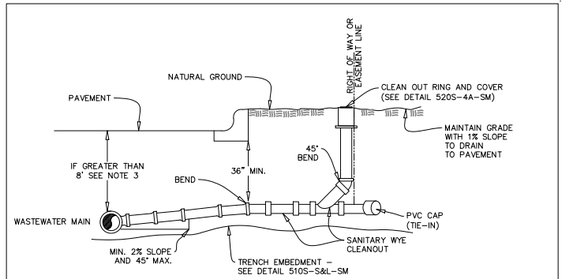

STANDARD CONNECTION

NOTE

1. THE PIPE WILL BE SLOPED NO MORE THAN 45° FROM HORIZONTAL AND HAVE A MINIMUM SLOPE OF 2% TO MAIN FROM BACK OF CURB.
2. CONNECTION JOINTS BEFORE AND AFTER BEND WILL NOT HAVE MORE THAN 5° DEFLECTION TO ACHIEVE THE REQUIRED SLOPE/ANGLE.
3. FOR MAINS THAT HAVE MORE THAN 8 FEET OF COVER MAINTAIN MINIMUM SLOPE TO WASTEWATER MAIN AND USE DETAIL 520–6–SM TO CONNECT TO WASTEWATER MAIN.

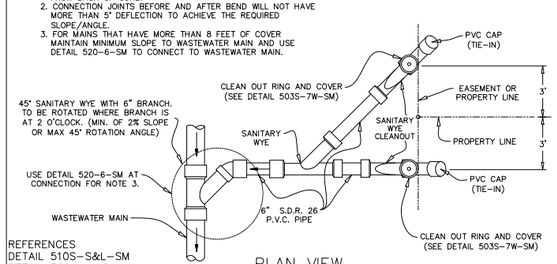

PLAN VIEW

REFERENCES
DETAIL 510S–S&L–SM
DETAIL 520–4A–SM
DETAIL 520–6–SM

The City of San Marcos
Engineering and Capital Improvements

DUAL LATERAL CONNECTION

RECORD COPY SIGNED BY — LAURIE MOYER, P.E. — 9/13/2016 ADOPTED

THE ARCHITECT/ENGINEER ASSUMES RESPONSIBILITY FOR APPROPRIATE USE OF THIS STANDARD

N.T.S. — 520S–3–SM — STANDARD DETAIL

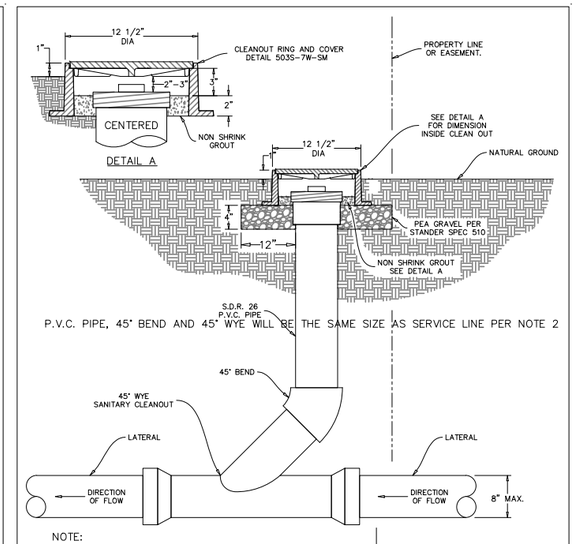

NOTE:

1. THIS DETAIL IS NOT FOR ANY LOCATION THAT WILL HAVE TRAFFIC LOADS.
2. THIS STANDARD IS ONLY FOR LATERALS 8" OR LESS AND ALL FITTING AND PIPE FOR CLEANOUT WILL BE THE SAME SIZE AS LATERAL.
3. TRENCH SHALL BE COMPACTED AND RESTORED AS PER STANDARD DETAIL 510S–S&L–SM.
4. CLEAN OUT WILL BE LOCATED IN R.O.W. OR WASTEWATER EASEMENT.

REFERENCES
DETAIL 503S–7W–SM
DETAIL 510S–S&L–SM

The City of San Marcos
Engineering and Capital Improvements

WASTEWATER CLEANOUT

RECORD COPY SIGNED BY — LAURIE MOYER, P.E. — 9/13/2016 ADOPTED

THE ARCHITECT/ENGINEER ASSUMES RESPONSIBILITY FOR APPROPRIATE USE OF THIS STANDARD

N.T.S. — 520S–4A–SM — STANDARD DETAIL

ALAN PLUMMER ASSOCIATES, INC.
ENVIRONMENTAL ENGINEERS AND SCIENTISTS
6300 LA CALMA DRIVE, SUITE 400
AUSTIN, TEXAS 78752-3843
PHONE: 512-452-5905 FAX: 512-452-2325
TEXAS REGISTERED ENGINEERING FIRM F-13

NO.	DATE	REVISION	BY

CITY OF WIMBERLEY
221 Stillwater
Wimberley, TX 78676

CITY OF WIMBERLEY
WASTEWATER TREATMENT PLANT AND COLLECTION SYSTEM PROJECT

STANDARD DETAILS
CIVIL V

STATE OF TEXAS
STEPHEN J. COONAN
65516
LICENSED PROFESSIONAL ENGINEER
12/15/16

BAR IS ONE INCH ON ORIGINAL DRAWING.
ONE INCH

DESIGNED APAI
DRAWN APAI
CHECKED APAI
REVIEWED APAI

Seq. of

Dwg. No. C–1004

1732–002–01

PRINTED: 12/14/2016 7:13 PM M:\Projects\1732\002-01\Acad\SHEETFILES\C-1004.dwg SAVED: 9/16/2016 10:41 AM USER: Dickman, Brian

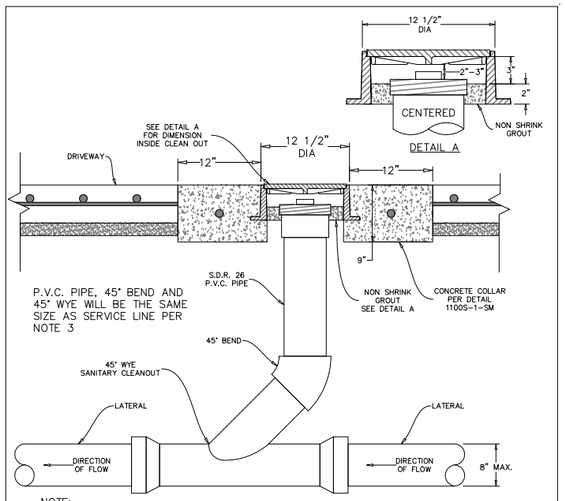

NOTE:

1. SERVICE SHALL BE DESIGNED TO AVOID CLEANOUT LOCATION WITHIN DRIVEWAYS.
2. THIS STANDARD DETAIL IS ONLY FOR EXISTING CLEANOUTS THAT ARE LOCATED WITHIN EXISTING DRIVEWAYS.
3. THIS STANDARD IS ONLY FOR SERVICES 8" OR LESS AND ALL FITTING AND PIPE FOR CLEANOUT WILL BE THE SAME SIZE AS LATERAL.
4. SUBGRADE SHALL BE COMPACTED AS PER STANDARD DETAIL 510S-S&L-SM.
5. CONCRETE COLLAR IN DRIVEWAY WILL BE PER 1100S-1-SM FOR MANHOLE DIMENSIONS MINIMUM OF 9" DEPTH.
6. TRAFFIC BEARING FRAME AND COVER ONLY. HEAVY DUTY.

REFERENCES
DETAIL 510S-S&L-SM
DETAIL 1100S-1-SM

The City of San Marcos Engineering and Capital Improvements	EXISTING WASTEWATER CLEANOUT ADJUSTMENT TO GRADE IN DRIVEWAY	
RECORD COPY SIGNED BY 9/13/2016 LAURIE MOYER, P.E. ADOPTED	THE ARCHITECT/ENGINEER ASSUMES RESPONSIBILITY FOR APPROPRIATE USE OF THIS STANDARD	520S-4-SM N.T.S. STANDARD DETAIL

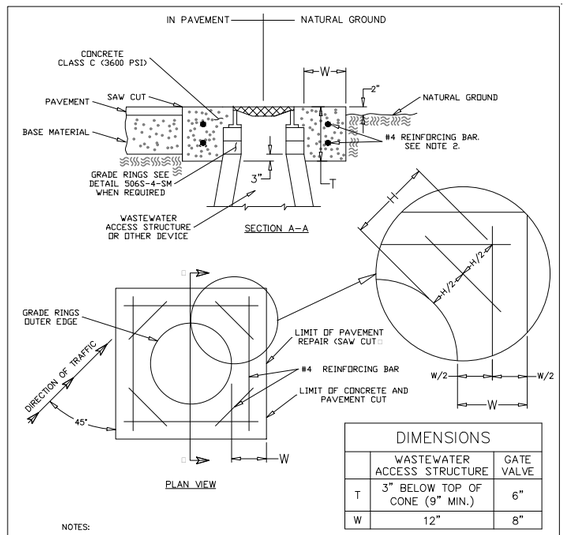

DIMENSIONS		
	WASTEWATER ACCESS STRUCTURE	GATE VALVE
T	3" BELOW TOP OF CONE (9" MIN.)	6"
W	12"	8"

NOTES:

1. THE CONCRETE COLLAR SHALL BE REINFORCED WITH #4 BARS AS SHOWN. THE CONCRETE SHALL EXTEND TO EDGE OF SAW CUT PAVEMENT EDGE.
2. REBAR WILL BE PLACED IN TWO LAYERS. FIRST LAYER (1/3 T) FROM TOP OF COLLAR AND SECOND LAYER (2/3 T) FROM TOP OF COLLAR. IF (T) IS 12" OR LESS ONE LAYER OF REBAR WILL BE USED, PLACED MID POINT BETWEEN TOP AND BOTTOM OF COLLAR.
3. REQUIREMENTS FOR NEW MANHOLE CONSTRUCTION AND MINOR MANHOLE ADJUSTMENTS IN NEW RECONSTRUCTION AND REAPING PROJECTS ARE INCLUDED IN DETAIL NO. 506S-3-SM, 506S-8-SM, 506S-8A-SM AND 506S-10-SM.
4. REFER TO TRENCH DETAIL FOR ADDITIONAL BACKFILL REQUIREMENTS WITH APPROPRIATE CONDITIONS.

REFERENCES
DETAIL 506S-4-SM

The City of San Marcos Engineering and Capital Improvements	Concrete Riser Collar	
RECORD COPY SIGNED BY 9/13/2016 LAURIE MOYER, P.E. ADOPTED	THE ARCHITECT/ENGINEER ASSUMES RESPONSIBILITY FOR APPROPRIATE USE OF THIS STANDARD	1100S-1-SM N.T.S. STANDARD DETAIL

ALAN PLUMMER ASSOCIATES, INC.
ENVIRONMENTAL ENGINEERS AND SCIENTISTS
6300 LA CALMA DRIVE, SUITE 400
AUSTIN, TEXAS 78752-3843
PHONE: 512-452-5905 FAX: 512-452-2325
TEXAS REGISTERED ENGINEERING FIRM F-13

NO.	DATE	REVISION	BY

CITY OF WIMBERLEY
221 Stillwater
Wimberley, TX 78676

CITY OF WIMBERLEY
WASTEWATER TREATMENT PLANT AND COLLECTION SYSTEM PROJECT

STANDARD DETAILS
CIVIL VI

STATE OF TEXAS
STEPHEN J. COONAN
65516
LICENSED PROFESSIONAL ENGINEER
12/15/16

BAR IS ONE INCH ON ORIGINAL DRAWING.
ONE INCH

DESIGNED APAI
DRAWN APAI
CHECKED APAI
REVIEWED APAI

Seq. of

Dwg. No. C-1005

1732-002-01

PRINTED: 12/14/2016 7:14 PM M:\Projects\1732\002-01\Acad\SHEETFILES\C-1005.dwg SAVED: 9/16/2016 10:41 AM USER: Dickman, Brian

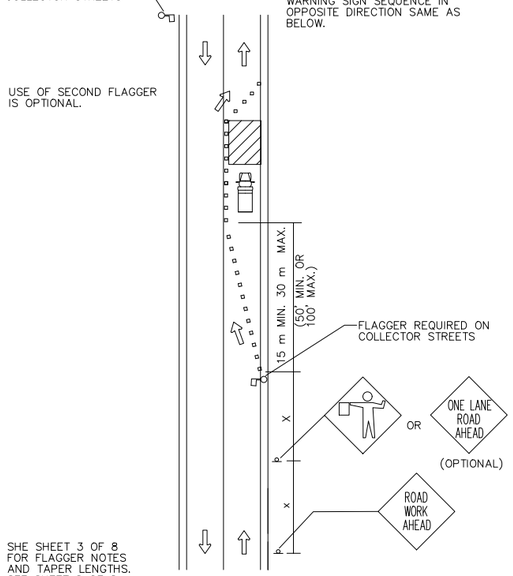

DEPARTMENT OF PUBLIC WORKS		COLLECTOR / RESIDENTIAL STREET FLAGGING OPERATIONS	STANDARD NO.
RECORD COPY SIGNED BY BILL GARDNER	03/13/06 ADOPTED	THE ARCHITECT/ENGINEER ASSUMES RESPONSIBILITY FOR APPROPRIATE USE OF THIS STANDARD.	804S–2 1 OF 8

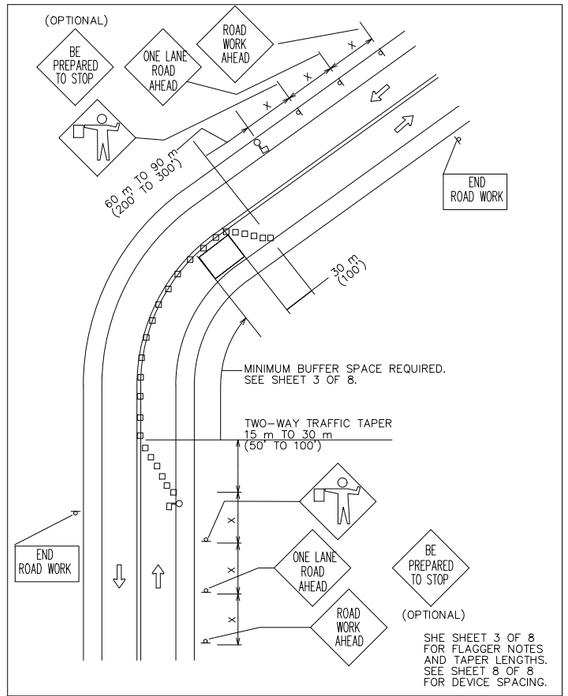

DEPARTMENT OF PUBLIC WORKS		FLAGGER SETUP FOR 2 LANE ROADWAY	STANDARD NO.
RECORD COPY SIGNED BY BILL GARDNER	03/13/06 ADOPTED	THE ARCHITECT/ENGINEER ASSUMES RESPONSIBILITY FOR APPROPRIATE USE OF THIS STANDARD.	804S–2 2 OF 8

1. FOR DAYTIME WORK, THE FLAGGER SHALL WEAR AN APPROVED BRIGHTLY COLORED VEST. FOR NIGHTTIME WORK, THE VEST SHALL BE RETROFLECTIVE. THE RETRO–REFLECTIVE MATERIAL SHALL BE ORANGE, YELLOW, WHITE, SILVER, STRONG YELLOW–GREEN OR A FLOURESCENT VERSION OF THESE COLORS AND SHALL BE VISIBLE AT A MINIMUM DISTANCE OF 305 m (1,000').
2. FOR LOW–VOLUME APPLICATIONS, A SINGLE FLAGGER MAY BE ADEQUATE. WHERE ONE FLAGGER CAN BE USED, SUCH AS FOR SHORT WORK AREAS ON STRAIGHT ROADWAYS, THE FLAGGER MUST BE VISIBLE TO APPROACHING TRAFFIC FROM BOTH DIRECTIONS.
3. FLAGGERS SHALL USE ONLY STOP/SLOW PADDLE TO DIRECT TRAFFIC UNLESS WORKING IN A SIGNALIZED INTERSECTION WHERE DRIVERS MAY BE CONFUSED BY THE SIGN PADDLE. HAND SIGNAL MAY BE USED IN THESE SITUATIONS.
4. FLAGGERS SHALL ENSURE THAT ALL REQUIRED SIGNING IS IN PLACE PRIOR TO BEGINNING FLAGGING OPERATIONS.
5. FLAGGERS SHALL NOT PERFORM WORK THAT IS NOT RELATED TO FLAGGING WHILE ON DUTY.
6. FLAGGERS MAY CARRY AIR HORNS OR WHISTLES TO WARN WORKERS OF AN EMERGENCY CONDITION.
7. FLAGGERS SHALL BE REQUIRED TO USE TWO–WAY RADIOS WHEN OUT OF CLEAR VIEW OF EACH OTHER.
8. FLOODLIGHTS SHOULD BE PROVIDED TO MARK FLAGGER STATIONS AT NIGHT AS NEEDED.

TAPER LENGTHS

SPEED (kmph)	SPEED* (mph)	LENGTH (meters)	LENGTH (feet)
30	20	11	35
40	25	17	55
50	30	26	85
55	35	36	120
65	40	51	170
70	45	66	220
80	50	84	280
90	55	101	335
95	60	125	415
105	65	146	485

*POSTED SPEED

DEPARTMENT OF PUBLIC WORKS		FLAGGER SETUP FOR 2 LANE ROADWAY	STANDARD NO.
RECORD COPY SIGNED BY BILL GARDNER	03/13/06 ADOPTED	THE ARCHITECT/ENGINEER ASSUMES RESPONSIBILITY FOR APPROPRIATE USE OF THIS STANDARD.	804S–2 3 OF 8

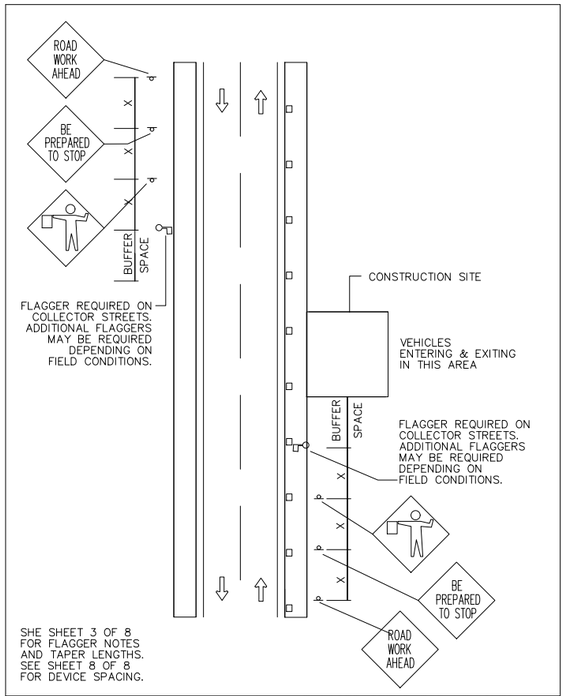

DEPARTMENT OF PUBLIC WORKS		FLAGGER SETUP FOR VEHICLES ENTERING AND EXITING WORK SITE	STANDARD NO.
RECORD COPY SIGNED BY BILL GARDNER	03/13/06 ADOPTED	THE ARCHITECT/ENGINEER ASSUMES RESPONSIBILITY FOR APPROPRIATE USE OF THIS STANDARD.	804S–2 4 OF 8

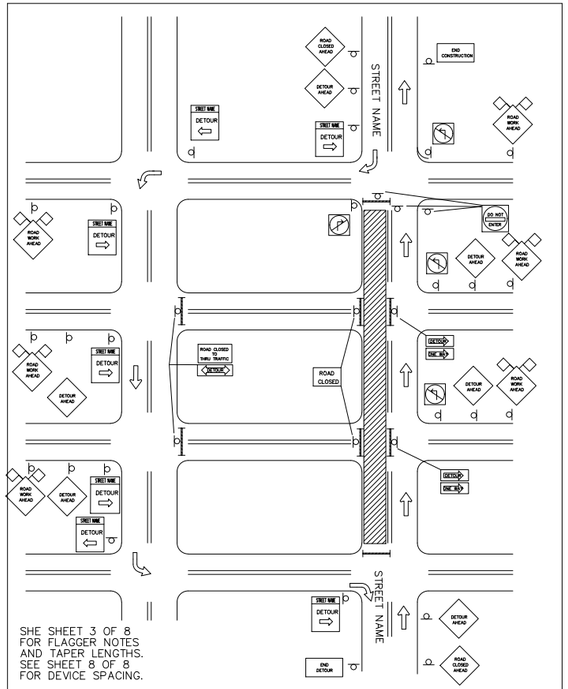

DEPARTMENT OF PUBLIC WORKS		STREET DETOUR SINGLE DIRECTION	STANDARD NO.
RECORD COPY SIGNED BY BILL GARDNER	03/13/06 ADOPTED	THE ARCHITECT/ENGINEER ASSUMES RESPONSIBILITY FOR APPROPRIATE USE OF THIS STANDARD.	804S–2 5 OF 8

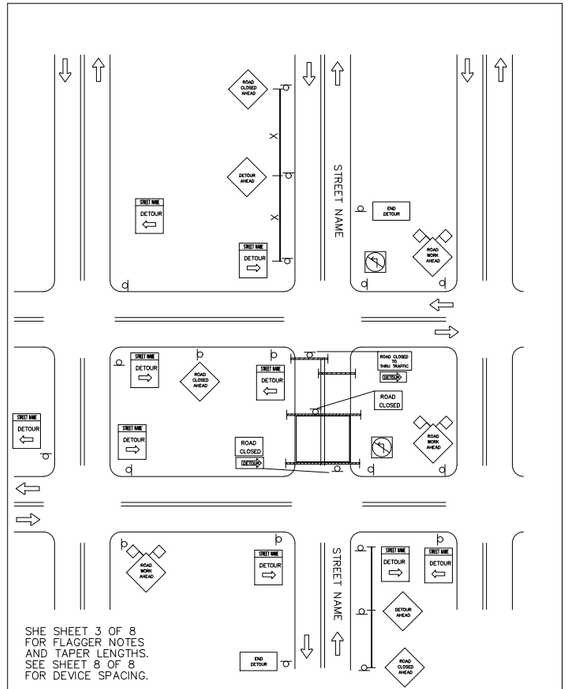

DEPARTMENT OF PUBLIC WORKS		STREET DETOUR BOTH DIRECTIONS	STANDARD NO.
RECORD COPY SIGNED BY BILL GARDNER	03/13/06 ADOPTED	THE ARCHITECT/ENGINEER ASSUMES RESPONSIBILITY FOR APPROPRIATE USE OF THIS STANDARD.	804S–2 6 OF 8

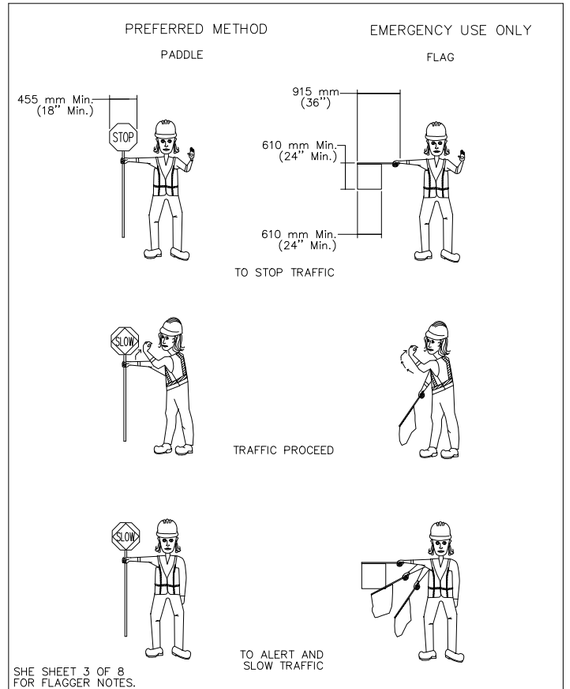

DEPARTMENT OF PUBLIC WORKS		USE OF HAND SIGNALING DEVICES	STANDARD NO.
RECORD COPY SIGNED BY BILL GARDNER	03/13/06 ADOPTED	THE ARCHITECT/ENGINEER ASSUMES RESPONSIBILITY FOR APPROPRIATE USE OF THIS STANDARD.	804S–2 7 OF 8

Typical Transition Lengths and Suggested Maximum Spacing of Devices

Speed KMPH	Posted Speed MPH	Formula	Minimum Desirable Taper Lengths (L) Meters (Feet) 3.0(10) Offset Meters (feet)	3.3(11) Offset Meters (feet)	3.6(12) Offset Meters (feet)	Suggested Max. Device Spacing On a taper Meters (feet)	On a tangent Meters (feet)	Suggested Sign Spacing Meters (Feet) "X" Dimension
50	30	$L=\frac{WS^2}{60}$	45 (150)	50 (165)	55 (180)	9 (30)	15–20 (60–75)	40 (120)
55	35		65 (205)	70 (225)	75 (245)	10 (35)	25–25 (70–90)	50 (160)
65	40		80 (265)	90 (295)	100 (320)	12 (40)	25–30 (80–100)	75 (240)
70	45	L=WS	135 (450)	150 (495)	165 (540)	13 (45)	25–30 (90–110)	100 (320)
80	50		150 (500)	165 (550)	180 (600)	15 (50)	30–35 (100–125)	120 (400)
90	55		165 (550)	185 (605)	200 (660)	16 (55)	35–40 (110–140)	150 (500)
95	60		180 (600)	200 (660)	220 (720)	18 (60)	40–45 (120–150)	180 (600)
105	65		195 (650)	215 (715)	235 (780)	19 (65)	40–50 (130–165)	210 (700)
115	70		215 (700)	235 (770)	255 (840)	21 (70)	45–55 (140–175)	240 (800)

LEGEND
- Channelizing devices
- Trailer mounted flashing arrow board
- Flagger

TRAFFIC DETOUR NOTES:

1. "STREET CLOSED" AND "STREET CLOSED TO THRU TRAFFIC" MAY BE USED IN PLACE OF "ROAD CLOSED" AND "ROAD CLOSED TO THRU TRAFFIC".
2. THE USE OF A STREET SIGN NAME NAME MOUNTED WITH THE M4–9 DETOUR SIGN** IS REQUIRED. THE STREET NAME PLATE SHOULD BE PLACED ABOVE THE DETOUR SIGN. THE PLATE MAY HAVE EITHER A WHITE–ON–GREEN OR A BLACK–ON–ORANGE LEGEND.
3. ADDITIONAL "DO NOT ENTER SIGNS" MAY BE DESIRABLE AT INTERSECTIONS WITH INTERVENING STREETS.
4. A M4–9 DETOUR SIGN** WITH AN ADVANCE TURN ARROW MAY BE USED IN ADVANCE OF A TURN. ON MULTI–LANE STREETS, SUCH SIGNS SHOULD BE USED.
5. M4–9 DETOUR SIGNS** MAY BE LOCATED ON THE FAR SIDE OF INTERSECTIONS.

** TEXAS MANUAL ON UNIFORM TRAFFIC CONTROL DEVICES

DEPARTMENT OF PUBLIC WORKS		TYPICAL LENGTHS & SPACING OF DEVICES, LEGEND and GENERAL NOTES	STANDARD NO.
RECORD COPY SIGNED BY BILL GARDNER	03/13/06 ADOPTED	THE ARCHITECT/ENGINEER ASSUMES RESPONSIBILITY FOR APPROPRIATE USE OF THIS STANDARD.	804S–2 8 OF 8

ALAN PLUMMER ASSOCIATES, INC.
ENVIRONMENTAL ENGINEERS AND SCIENTISTS
6500 LA CALMA DRIVE, SUITE 400
AUSTIN, TEXAS 78752-3843
PHONE: 512-452-5905 FAX: 512-452-2325
TEXAS REGISTERED ENGINEERING FIRM F-13

NO.	DATE	REVISION	BY

CITY OF WIMBERLEY
221 Stillwater
Wimberley, TX 78676

CITY OF WIMBERLEY
WASTEWATER TREATMENT PLANT AND COLLECTION SYSTEM PROJECT

STANDARD DETAILS
CIVIL VII

STATE OF TEXAS
STEPHEN J. COONAN
65516
LICENSED PROFESSIONAL ENGINEER
12/15/16

BAR IS ONE INCH ON ORIGINAL DRAWING.
ONE INCH

DESIGNED APAI
DRAWN APAI
CHECKED APAI
REVIEWED APAI
Seq. of
Dwg. No. C–1006
1732–002–01

PRINTED: 12/14/2016 7:14 PM M:\Projects\1732\002-01\Acad\SHEETFILES\C-1006.dwg SAVED: 9/16/2016 8:32 AM USER: Dickman, Brian

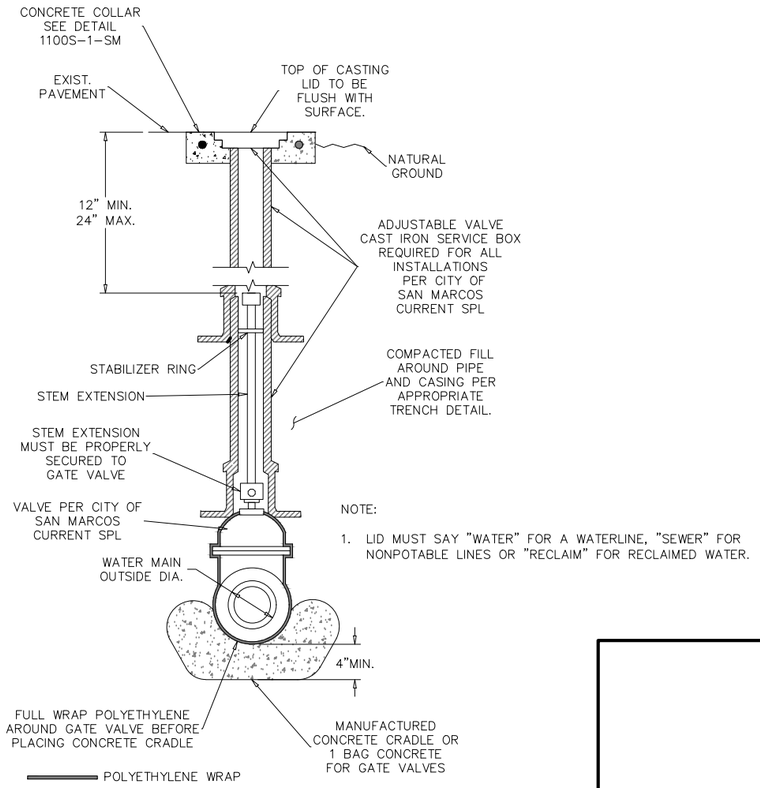

NOTE:

1. LID MUST SAY "WATER" FOR A WATERLINE, "SEWER" FOR NONPOTABLE LINES OR "RECLAIM" FOR RECLAIMED WATER.

GATE VALVE (511S)

NOT TO SCALE

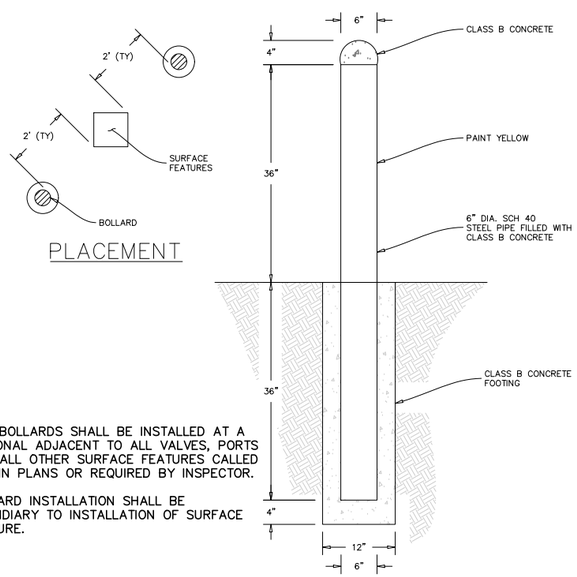

NOTES

1. TWO BOLLARDS SHALL BE INSTALLED AT A DIAGONAL ADJACENT TO ALL VALVES, PORTS AND ALL OTHER SURFACE FEATURES CALLED OUT IN PLANS OR REQUIRED BY INSPECTOR.
2. BOLLARD INSTALLATION SHALL BE SUBSIDIARY TO INSTALLATION OF SURFACE FEATURE.

PIPE BOLLARD (500S)

NOT TO SCALE

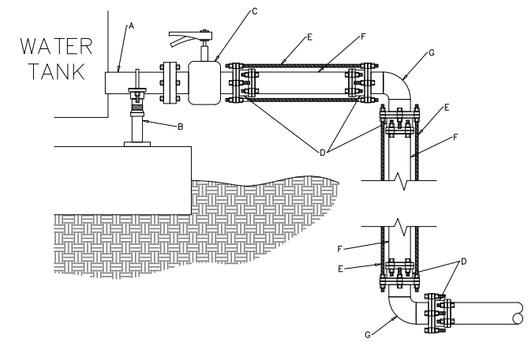

MATERIALS	
LABEL	ITEM
A	CARRIER PIPE TANK CONNECTION X FLANGE
B	PIPE SUPPORT. (ANVIL INTERNATIONAL, INC. PIPE SUPPORT AND STAND "FIG. 265 AND FIG. 63T" OR APPROVED EQUIVALENT.)
C	BUTTERFLY VALVE FLANGE X FLANGE
D	STEEL FLANGE COUPLING ADAPTOR
E	FULLY THREADED ROD
F	PIPE
G	DUCTILE IRON 90° BEND FLANGE X FLANGE

WATER TANK OUTLET (510S)

NOT TO SCALE

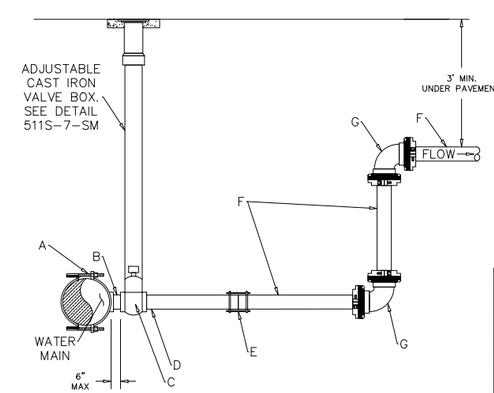

2 INCH TAP MATERIAL LIST		
LABEL	ITEM	SIZE
A	APPROVED TAPPING SADDLE/SLEEVE.	REQUIRED
B	GALVANIZED NIPPLE-THREADED	2"
C	TAPPING VALVE (RESILIENT WEDGE GATE, IRON BODY FEMALE/FEMALE) WITH VALVE BOX	2"
D	GALVANIZED NIPPLE-THREADED X THREADED	2"
E	RESTRAINT DRESSING COUPLINGS - MAXI-GRIP OR APPROVED EQUIVALENT	2"
F	SUPPLY PIPE SCH. 80 FULLY RESTRAINED	2"
G	DUCTILE IRON 90° BEND - HARCO-KNUCKLE JOINT RESTRAINT, OR APPROVED EQUIVALENT.	2"

NOTES

1. MAIN SIZE CAN NOT BE LESS THAN OR EQUAL TO TAP. TEE MAY BE USED WITH ENGINEERING DEPARTMENT APPROVAL FOR SIZE ON SIZE CONNECTION.
2. BACKFILL AND EMBEDMENT WILL BE PER CITY DETAIL 510-S&L-SM.
3. 3" SERVICE AND FIRE LINES WILL USE A 4" TAP AND HAVE A REDUCER TO A 3" LINE AFTER FIRST BEND LEADING TO A HORIZONTALLY LEVELED LINE.
4. ALL PARTS WILL BE PER THE CURRENT CITY OF SAN MARCOS STANDARD PRODUCTS LIST.

2" WATER MAIN TAP (520S)

NOT TO SCALE

ALAN PLUMMER ASSOCIATES, INC.
ENVIRONMENTAL ENGINEERS AND SCIENTISTS
6300 LA CALMA DRIVE, SUITE 400
AUSTIN, TEXAS 78752-3843
PHONE: 512-452-5905 FAX: 512-452-2325
TEXAS REGISTERED ENGINEERING FIRM F-13

NO.	DATE	REVISION	BY

CITY OF WIMBERLEY
221 Stillwater
Wimberley, TX 78676

CITY OF WIMBERLEY
WASTEWATER TREATMENT PLANT AND COLLECTION SYSTEM PROJECT

STANDARD DETAILS
MECHANICAL I

STATE OF TEXAS
STEPHEN J. COONAN
65516
LICENSED PROFESSIONAL ENGINEER
12/15/16

BAR IS ONE INCH ON ORIGINAL DRAWING.
ONE INCH

DESIGNED APAI
DRAWN APAI
CHECKED APAI
REVIEWED APAI

Seq. of

Dwg. No. M-1000

1732-002-01

PRINTED: 12/14/2016 7:15 PM M:\Projects\1732\002-01\Acad\SHEETFILES\M-1000.dwg SAVED: 9/16/2016 8:32 AM USER: Dickman, Brian

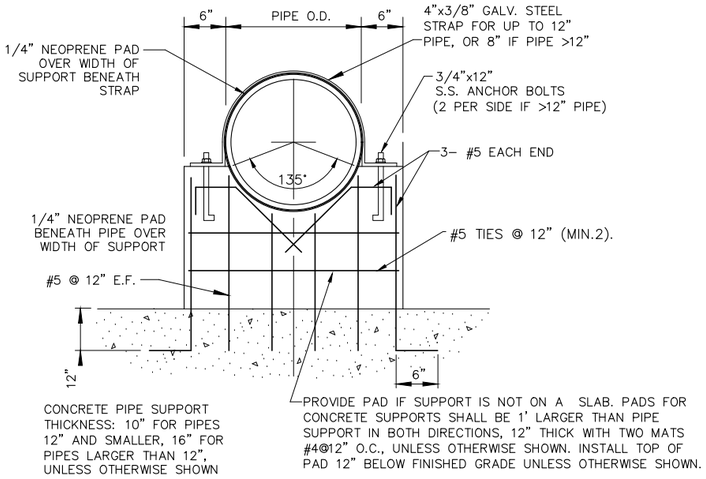

CONCRETE PIPE SUPPORT DETAIL (351)

NOT TO SCALE

ADJUSTABLE PIPE SADDLE SUPPORT SCHEDULE
DIMENSIONS IN INCHES

SIZE OF SUPPORTED PIPE	PIPE SIZE "A"	PIPE SIZE "B"	"C"	"D" MINIMUM	"D" MAXIMUM
* 2 1/2	2 1/2	1 1/2	9	8	13
3	2 1/2	1 1/2	9	8 1/2	13 1/2
3 1/2	2 1/2	1 1/2	9	8 1/2	13 1/2
4	3	2 1/2	9	9 1/2	14
6	3	2 1/2	9	10 1/2	15 1/2
8	3	2 1/2	9	11 1/2	16 1/2
10	3	2 1/2	9	13 1/2	18 1/2
12	3	2 1/2	9	15	19 1/2
14	4	3	11	16 1/2	20 1/2
16	4	3	11	17 1/2	22 1/2
18	6	3 1/2	13 1/2	19 1/2	24
20	6	3 1/2	13 1/2	21	25 1/2
24	6	4	13 1/2	23 1/2	28 1/2
30	6	4	13 1/2	27	31 1/2
32	6	4	13 1/2	28 1/2	32 1/2
36	6	4	13 1/2	30 1/2	34 1/2

* USE 2 1/2" SUPPORTS FOR PIPES LESS THAN 2 1/2"ø

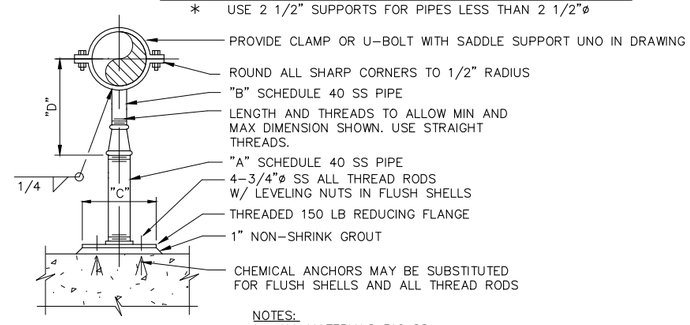

NOTES:
1. ALL MATERIALS 316 SS.
2. REFER TO CONCRETE BASE FOR 12" DUCT IN DETAIL 4, FA-10 FOR STANCHIONS INSTALLED IN YARD

ADJUSTABLE STANCHION PIPE SUPPORT (352)

NOT TO SCALE

ALAN PLUMMER ASSOCIATES, INC.
ENVIRONMENTAL ENGINEERS AND SCIENTISTS
6500 LA CALMA DRIVE, SUITE 400
AUSTIN, TEXAS 78752-3843
PHONE: 512-452-5905 FAX: 512-452-2325
TEXAS REGISTERED ENGINEERING FIRM F-13

NO.	DATE	REVISION	BY

CITY OF WIMBERLEY
221 Stillwater
Wimberley, TX 78676

CITY OF WIMBERLEY
WASTEWATER TREATMENT PLANT AND COLLECTION SYSTEM PROJECT

STANDARD DETAILS
MECHANICAL II

STATE OF TEXAS
STEPHEN J. COONAN
65516
LICENSED PROFESSIONAL ENGINEER
12/15/16

BAR IS ONE INCH ON ORIGINAL DRAWING.
ONE INCH

DESIGNED APAI
DRAWN APAI
CHECKED APAI
REVIEWED APAI

Seq. of

Dwg. No. M-1001

1732-002-01

PRINTED: 12/14/2016 7:15 PM M:\Projects\1732\002-01\Acad\SHEETFILES\M-1001.dwg SAVED: 9/16/2016 8:32 AM USER: Dickman, Brian

NOTE:
1. AT EA. HOSE STATION, FURNISH A 50' 1½"ø HOSE, 100% POLYESTER DOUBLE JACKET, WITH 1 MALE AND 1 FEMALE NST SS COUPLING (SWIVEL TYPE) ATTACHED. FURNISH A SS 1½" ADJUSTABLE FLOW NOZZLES WITH NST THREADS.
2. PROVIDE NON-POTABLE WATER SIGN AT EACH NPW HOSE STATION.
3. PROVIDE SODIUM HYPOCHLORITE HAZARD IDENTIFICATION PLACARD PER DETAIL 427/M-1004 AT EACH SH HOSE STATION.

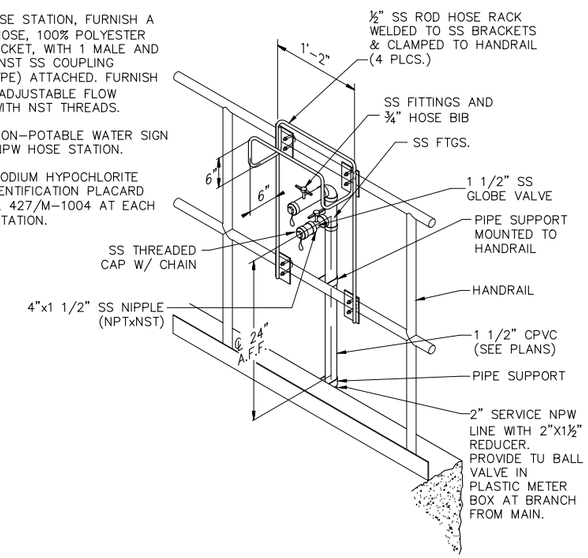

HANDRAIL MOUNTED HOSE STATION (304)
NOT TO SCALE

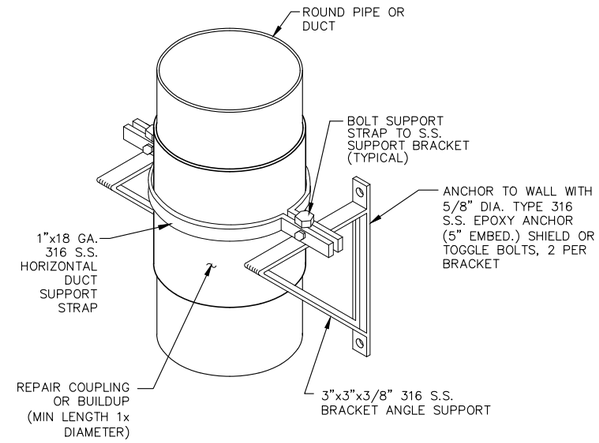

VERTICAL SUPPORT (500)
NOT TO SCALE

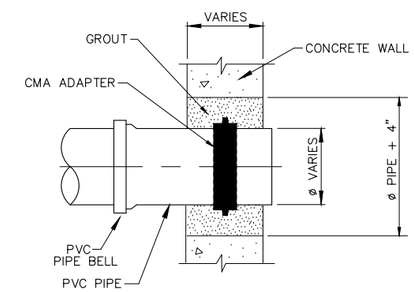

PVC WALL PENETRATION (332)
NOT TO SCALE

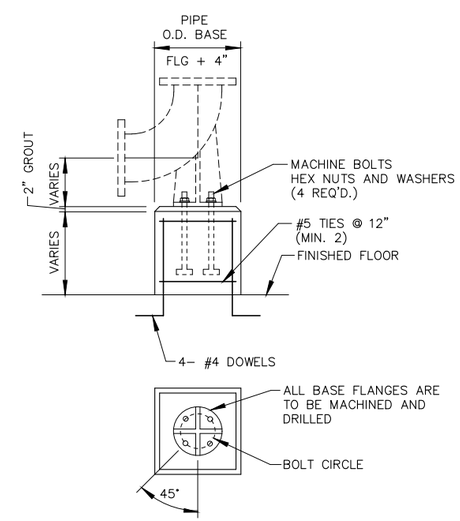

BASE ELBOW PIPE SUPPORT (353)
NOT TO SCALE

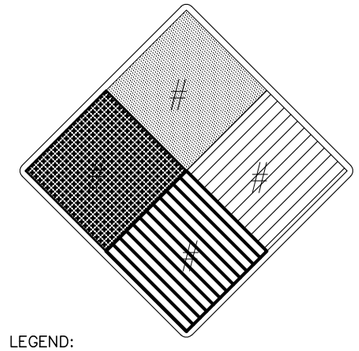

LEGEND:

	BLUE	HEALTH HAZARD
	RED	FIRE HAZARD
	YELLOW	REACTIVITY
	WHITE	SPECIAL NOTICE

NOTES:

1. SIGNS SHALL BE OF THE SELF-ADHESIVE VINYL TYPE FOR MOUNTING ON TANKS, AND METAL FOR MOUNTING TO WALLS. WALL MOUNTED SIGNS SHALL BE PROVIDED AT EACH ENTRANCE GATE TO THE PLANT AND AT EACH EXTERIOR PERSONNEL DOOR INTO THE SECONDARY TREATMENT BUILDING.
2. SIGNS SHALL MEASURING 1'-6" x 1'-6" FOR THE BULK STORAGE TANK AND 1'-0" x 1'-0" FOR THE DAY TANKS.
3. THE CONTRACTOR SHALL VERIFY IDENTIFICATION MARKINGS FOR THE SIGNS PRIOR TO PURCHASE.
4. THE TABLE PROVIDED IN THIS DETAIL IS FOR REFERENCE AND SHALL BE VERIFIED.
5. LETTERING SHALL HAVE A MINIMUM HEIGHT OF 5-3/4-INCHES FOR THE BULK STORAGE TANK PLACARDS.
6. LETTERING SHALL HAVE A MINIMUM HEIGHT OF 4-1/8-INCHES FOR THE DAY STORAGE TANK PLACARDS.

CHEMICAL	HEALTH HAZARD	FIRE HAZARD	REACTIVITY	SPECIAL NOTICE
ALUMINUM SULFATE	3	0	0	~~W~~
SODIUM HYPOCHLORITE	3	0	2	OX

HAZARD IDENTIFICATION PLACARD (427)
NOT TO SCALE

WALL FITTINGS CAN BE FLG.-FLG. (SHOWN), FLG.-MJ FLG.-PE, MJ-MJ, MJ-PE, PE-PE.

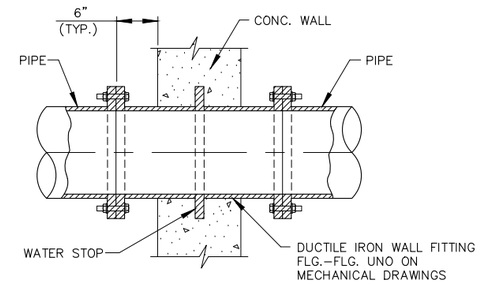

STEEL OR DIP WALL FITTING (320)
NOT TO SCALE

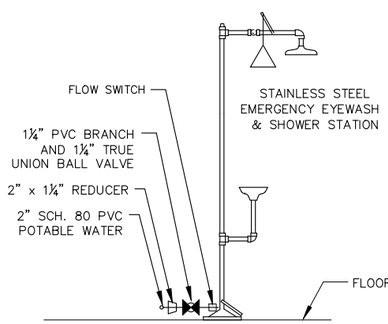

NOTES:

1. EYEWASH UNITS SHALL BE EYEWASH/SHOWER COMBNATION WITH INSULATION AND HEAT TRACING FOR FREEZE PROOF OPERATION. INDIVIDUAL OPERATION OF 10-INCH DELUX SHOWER HEAD AND TWIN FACE SPRAY UNITS SHALL BE PROVIDED. PROVIDE TEMPERATURE ACTUATED BLEED VALVES. UNITS SHALL BE HAWS MODEL 8317 CTFP OR APPROVED EQUIVALENT.
2. MOUNT TO SLAB PER MANUFACTURER'S INSTRUCTIONS. USE 316 SS EPOXY ANCHORS

EMERGENCY SHOWER AND EYEWASH (390)
NOT TO SCALE

ALAN PLUMMER ASSOCIATES, INC.
ENVIRONMENTAL ENGINEERS AND SCIENTISTS
6300 LA CALMA DRIVE, SUITE 400
AUSTIN, TEXAS 78752-3843
PHONE: 512-452-5905 FAX: 512-452-2325
TEXAS REGISTERED ENGINEERING FIRM F-13

NO.	DATE	REVISION	BY

CITY OF WIMBERLEY
221 Stillwater
Wimberley, TX 78676

CITY OF WIMBERLEY
WASTEWATER TREATMENT PLANT AND COLLECTION SYSTEM PROJECT

STANDARD DETAILS
MECHANICAL III

STATE OF TEXAS
STEPHEN J. COONAN
65516
LICENSED PROFESSIONAL ENGINEER
12/15/16

BAR IS ONE INCH ON ORIGINAL DRAWING.
ONE INCH

DESIGNED APAI
DRAWN APAI
CHECKED APAI
REVIEWED APAI

Seq. of

Dwg. No. **M-1002**

1732-002-01

PRINTED: 12/14/2016 7:16 PM M:\Projects\1732\002-01\Acad\SHEETFILES\M-1002.dwg SAVED: 9/16/2016 8:32 AM USER: Dickman, Brian

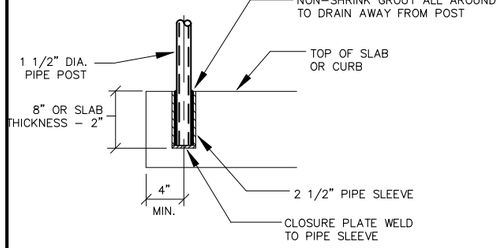

TOP MOUNTED HANDRAIL

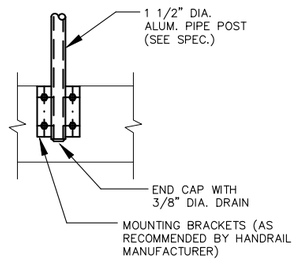

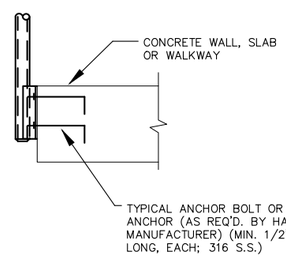

SIDE MOUNTED HANDRAIL

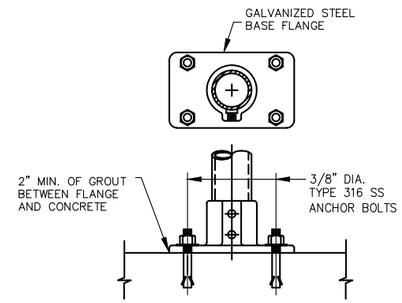

BASE FLANGE DETAIL

NOTE:
CONTRACTOR SHALL WELD FLANGE WHEN INSTALLED ON TOP OF GALVANIZED STEEL PLATE.

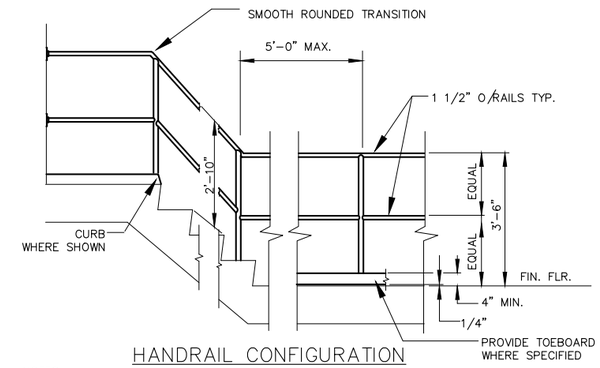

HANDRAIL CONFIGURATION

NOTES:

1. RAILING POST LOCATIONS SHALL BE FIELD MEASURED & RAILING FABRICATED TO FIT.
2. ALL HANDRAILS SHALL BE ALUMINUM.
3. PROVIDE EXPANSION JOINTS IN HANDRAIL AT 20'–0" MAXIMUN SPACING & AT ALL EXPANSION JOINTS IN CONCRETE STRUCTURES.

TYPICAL ALUMINUM HANDRAIL DETAILS (444)

NOT TO SCALE

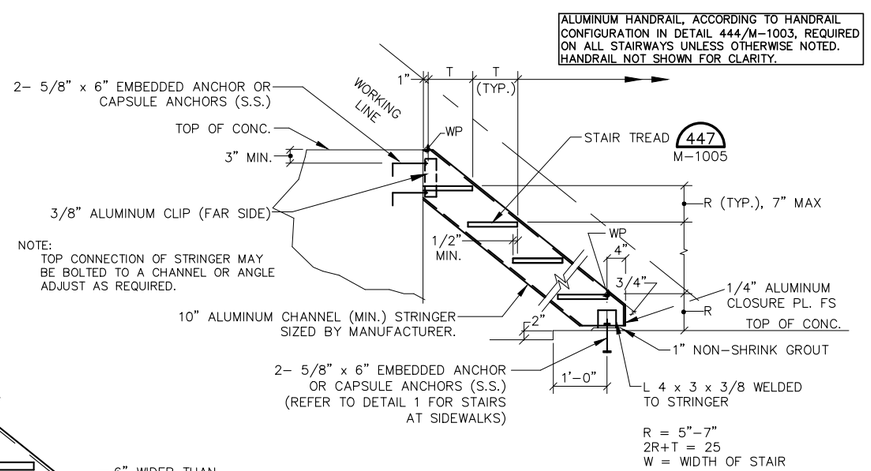

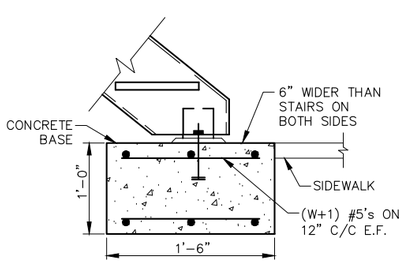

DETAIL 1

NOT TO SCALE

HOT DIPPED GALVANIZED STAIR (445)

NOT TO SCALE

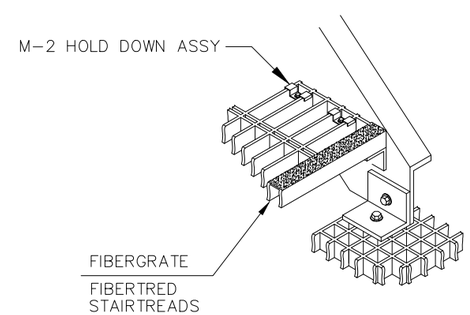

STAIR TREAD (447)

NOT TO SCALE

ALAN PLUMMER ASSOCIATES, INC.
ENVIRONMENTAL ENGINEERS AND SCIENTISTS
6300 LA CALMA DRIVE, SUITE 400
AUSTIN, TEXAS 78752-3843
PHONE: 512-452-5905 FAX: 512-452-2325
TEXAS REGISTERED ENGINEERING FIRM F-13

NO.	DATE	REVISION	BY

CITY OF WIMBERLEY
221 Stillwater
Wimberley, TX 78676

CITY OF WIMBERLEY
WASTEWATER TREATMENT PLANT AND COLLECTION SYSTEM PROJECT

STANDARD DETAILS
MECHANICAL IV

STATE OF TEXAS
STEPHEN J. COONAN
65516
LICENSED PROFESSIONAL ENGINEER
12/15/16

BAR IS ONE INCH ON ORIGINAL DRAWING.
ONE INCH

DESIGNED APAI
DRAWN APAI
CHECKED APAI
REVIEWED APAI

Seq. of

Dwg. No. M–1003

1732–002–01

PRINTED: 12/14/2016 7:17 PM M:\Projects\1732\002-01\Acad\SHEETFILES\M-1003.dwg SAVED: 9/16/2016 8:32 AM USER: Dickman, Brian

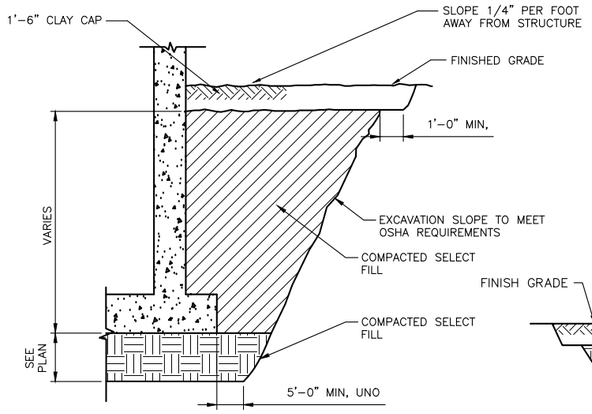

BELOW GRADE STRUCTURE

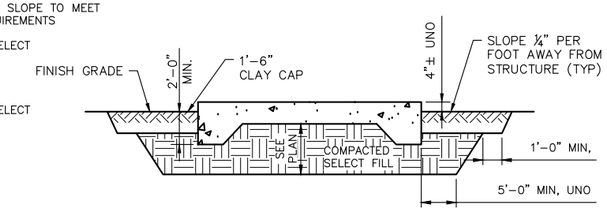

SLAB ON GRADE

NOTES:

1. UNLESS OTHERWISE INDICATED ON THE PLANS, THIS DETAIL IS REPRESENTATIVE OF THE REQUIRED EXCAVATION AND BACKFILL FOR ALL STRUCTURES IN THIS CONTRACT.
2. EXCAVATION LINE IS FOR REFERENCE ONLY AND NOT SHOWN TO ANY SCALE OR SLOPE. EXCAVATION SHALL CONFORM TO SPECIFICATIONS AND TRENCH SAFETY REQUIREMENTS.
3. UNLESS OTHERWISE INDICATED ON THE PLAN, SUBGRADE AND FILL MATERIAL SHALL BE PREPARED AS FOLLOWS:
   a. THE MINIMUM DEPTH OF THE SOILS BELOW THE BOTTOM OF THE FOUNDATION SLAB INDICATED ON THE PLANS SHALL BE REMOVED AND REPLACED WITH SELECT FILL AND COMPACTED TO THE DENSITY REQUIRED.
   b. UNLESS OTHERWISE INDICATED ON THE PLANS, THE SELECT FILL SHALL BE PLACED TO EXTEND AT LEAST 5 FEET LATERALLY BEYOND THE PERIMETER OF THE FOUNDATION.
   c. THE BOTTOM OF THE EXCAVATION SHALL BE PROOFROLLED IN THE PRESENCE OF AND APPROVED BY A QUALIFIED GEOTECHNICAL ENGINEER TO LOCATE ANY SOFT OR UNSTABLE AREAS. IF PRESENT, THESE SOFT OR LOOSE SOILS SHALL BE REMOVED TO A STABLE SUBGRADE AND REPLACED WITH COMPACTED SELECT FILL.
   d. FOLLOWING PROOFROLLING, THE UPPER 12 INCHES OF SUBGRADE AT THE BASE OF THE EXCAVATION SHALL BE MOISTURE CONDITIONED TO BETWEEN OPTIMUM AND +4 PERCENTAGE POINTS OF OPTIMUM MOISTURE CONTENT AND COMPACTED TO AT LEAST 95 PERCENT OF ASTM D 698.
   e. AFTER MOISTURE CONDITIONING AND COMPACTING THE SUBGRADE, SELECT FILL SHALL BE PLACED WITHIN THE EXCAVATION IN LOOSE LIFTS WITH A MAXIMUM 8-INCH THICKNESS. FILL PLACED ALONG SLOPES SHALL BE PLACED IN HORIZONTAL LIFTS THAT ARE BENCHED INTO THE SLOPE.
   f. EACH LIFT OF SELECT FILL SHALL BE COMPACTED TO AT LEAST 98% OF THE MAXIMUM DRY DENSITY DETERMINED BY ASTM D 698 AT MOISTURE CONTENTS BETWEEN -2 AND +3 PERCENTAGE POINTS OF OPTIMUM MOISTURE CONTENT. THE SELECT FILL SHALL BE PLACED WITHIN 48 HOURS OF COMPLETION OF THE SUBGRADE COMPACTION.
   g. SELECT FILL SHALL CONSIST OF A CRUSHED LIMESTONE BASE MATERIAL MEETING THE REQUIREMENTS OUTLINED IN TXDOT ITEM 247, TYPE A, GRADES 1 OR 2. ALL SELECT FILL SHALL HAVE SULFATE CONCENTRATIONS LESS THAN 500 PPM.
   h. PLACE 1'-6" OF IMPERVIOUS CLAY "CAP" FREE OF ORGANIC MATERIALS AT GRADE TO COVER ENTIRE AREA OF THE FILLED SELECT FILL, UNLESS THE SELECT FILL WILL BE COVERED BY A PROPOSED CONCRETE PAVING INDICATED ON THE PLANS.
   i. THE CLAY "CAP" SHALL CONSIST OF CLAY SOILS HAVING A PI BETWEEN 15 AND 35 AND AT LEAST 40% PASSING THE NO. 200 SIEVE AND BE COMPACTED TO A MINIMUM OF 95 PERCENT OF THE MAXIMUM DRY DENSITY AS DETERMINED BY ASTM D698. THE MOISTURE CONTENT OF THE FILL SHALL BE WITHIN -2 TO +3 % OF THE OPTIMUM MOISTURE AS DETERMINED BY ASTM D698.
   j. THE SITE PREPARATION OPERATIONS SHALL BE OBSERVED AND TESTED BY A GEOTECHNICAL ENGINEER.

EXCAVATION AND BACKFILL (626)

NOT TO SCALE

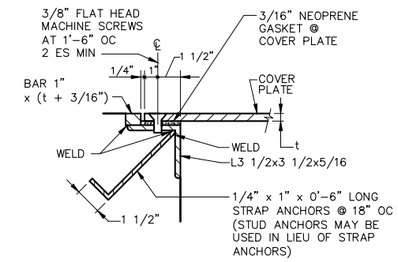

t = 3/8" UON ON DRAWINGS

GASKETED COVER PLATE SEAT (665)

NOT TO SCALE

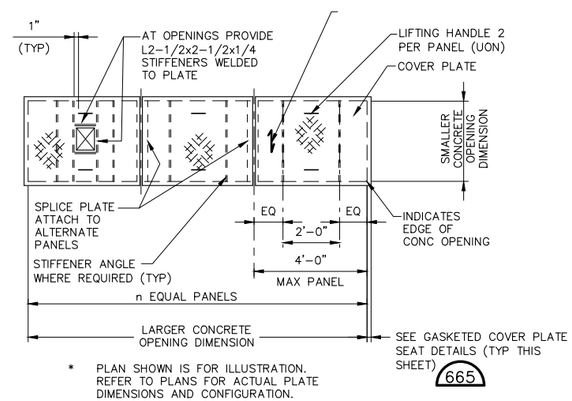

* PLAN SHOWN IS FOR ILLUSTRATION. REFER TO PLANS FOR ACTUAL PLATE DIMENSIONS AND CONFIGURATION.

TYPICAL PLAN

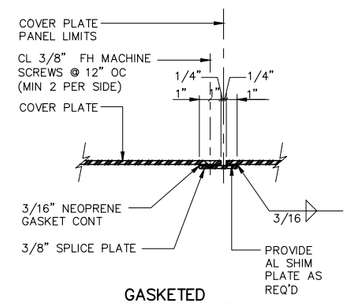

GASKETED SPLICE PLATE DETAIL

DETAIL (A)

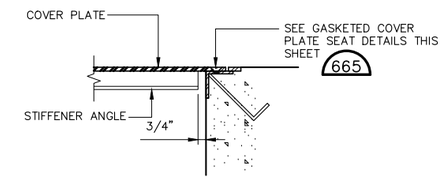

STIFFENER ANGLE END DETAIL

DETAIL (B)

SPAN	STIFFENER SIZE
<=3'-6"	L2½ X 1½ X ¼"
<=4'-6"	L3 X 2 X 3/8"
<=6'-0"	L31/2 X 3 X 3/8"

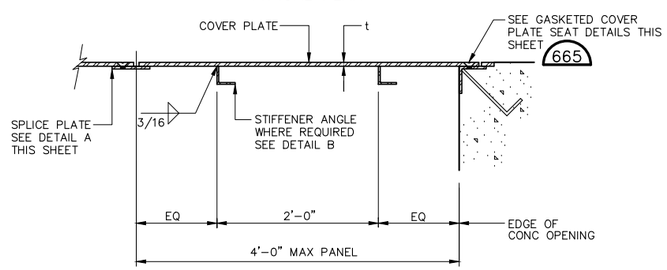

t = 3/8", UNLESS OTHERWISW NOTED

TYPICAL SECTION

NOTES:

1. COVER PLATES, ANGLE FRAMES AND STIFFENERS SHALL BE ALUMINUM. ALL FASTENERS AND ANCHORS SHALL BE TYPE 316 STAINLESS STEEL.
2. ALL ANGLE FRAMES FOR COVER PLATES ARE TO BE MITERED AND WELDED AT CORNERS.
3. ALL COVER PLATES SHALL BE SECURELY FASTENED TO SUPPORTS WITH ⅜" STAINLESS STEEL FLAT-HEAD MACHINE SCREWS AT 1'-6" ON CENTER, UNLESS OTHERWISE NOTED.
4. PLACE STIFFENERS PARALLEL TO THE SHORTER SPAN BETWEEN SUPPORTS OF THE PLATE OR AS INDICATED ON THE PLANS. PLACE LONG LEG OF STIFFENERS PERPENDICULAR TO THE PLATES.
5. ALL PLATES SHALL BE PROVIDED IN SECTIONS WITH LIFTING HANDLE AS DETAILED. A MINIMUM OF TWO STIFFENERS SHALL BE PROVIDED IN EACH PLATE SECTION.
6. PROVIDE DISSIMILAR MATERIAL PROTECTION FOR ALUMINUM IN CONTACT WITH CONCRETE PER SPECIFICATION.

COVER PLATE DETAILS (664)

NOT TO SCALE

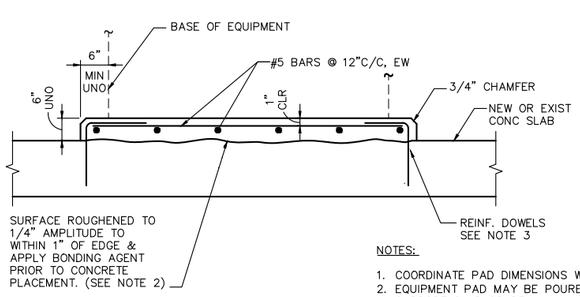

NOTES:

1. COORDINATE PAD DIMENSIONS WITH EQUIPMENT MFR.
2. EQUIPMENT PAD MAY BE POURED MONOLITHICALLY W/ SUPPORT SLAB OR BEAM.
3. REINFORCING DOWELS:
   a. FOR NEW CONC SLAB: #5 DOWELS W/6" HOOK @ 12" C/C AROUND ALL SIDES OF PAD.
   b. FOR EXIST CONC SLAB: #5 DOWELS W/ADHESIVE ANCHORS @ 12" C/C AROUND ALL SIDES OF PAD. (EMBED DEPTH=2/3 x SLAB THICKNESS, 5" MIN.)

EQUIPMENT & PUMP PAD REINFORCING DETAIL (606)

NOT TO SCALE

ALAN PLUMMER ASSOCIATES, INC.
ENVIRONMENTAL ENGINEERS AND SCIENTISTS
6300 LA CALMA DRIVE, SUITE 400
AUSTIN, TEXAS 78752-3843
PHONE: 512-452-5905 FAX: 512-452-2325
TEXAS REGISTERED ENGINEERING FIRM F-13

NO.	DATE	REVISION	BY

CITY OF WIMBERLEY
221 Stillwater
Wimberley, TX 78676

CITY OF WIMBERLEY
WASTEWATER TREATMENT PLANT AND COLLECTION SYSTEM PROJECT

STANDARD DETAILS
STRUCTURAL I

STATE OF TEXAS
STEPHEN J. COONAN
65516
LICENSED PROFESSIONAL ENGINEER
12/15/16

BAR IS ONE INCH ON ORIGINAL DRAWING.
ONE INCH

DESIGNED APAI
DRAWN APAI
CHECKED APAI
REVIEWED APAI

Seq. of

Dwg. No. S-1000

1732-002-01

PRINTED: 12/14/2016 7:17 PM M:\Projects\1732\002-01\Acad\SHEETFILES\S-1000.dwg SAVED: 9/16/2016 8:32 AM USER: Dickman, Brian

ONE-LINE DIAGRAM SYMBOLS

- ELECTRIC SERVICE METER
- WEATHERHEAD
- 60A — FUSE, RATING AS SHOWN
- ATS 100A 4P — TRANSFER SWITCH, SIZE AND NUMBER OF POLES AS SHOWN, ATS-AUTOMATIC, MTS-MANUAL, SATS-SERVICE ENTRANCE AUTO
- 3-CTS — INSTRUMENT CLASS CURRENT TRANSFORMER, NUMBER AS SHOWN
- 2-PTS — VOLTAGE TRANSFORMER, INSTRUMENT CLASS, FUSED PRIMARY AND SECONDARY, NUMBER AS INDICATED
- 1-BYZ — ZERO SEQUENCE INSTRUMENT CLASS CURRENT TRANSFORMER, NUMBER AS SHOWN
- 60A 3P — LOW VOLTAGE THERMAL MAGNETIC CIRCUIT BREAKER, SIZE AND NUMBER OF POLES AS INDICATED
- SIZE-2 — FULL VOLTAGE, NON-REVERSING MOTOR STARTER, SIZE AS INDICATED
- SIZE-3 — FULL VOLTAGE, NON-REVERSING COMBINATION MOTOR STARTER, SIZE AS INDICATED
- SIZE-1 — FULL VOLTAGE, TWO SPEED MOTOR STARTER, SIZE AS INDICATED
- SIZE-1 — FULL VOLTAGE, REVERSING MOTOR STARTER, SIZE AS INDICATED
- ## — MOTOR, HORSEPOWER AS INDICATED
- MOTOR WINDING HEATER
- MOTOR OR STARTER ENCLOSURE SPACE HEATER
- MOISTURE/LEAKAGE SENSOR
- THERMISTORS
- RESISTANCE TEMPERATURE DETECTORS (RTD'S) AND THERMISTORS
- RESISTANCE TEMPERATURE DETECTORS (RTD'S)
- 60A 40A — FUSED DISCONNECT SWITCH, SIZE AS INDICATED, SWITCH/FUSE
- 60A — NONFUSED DISCONNECT SWITCH, SIZE AS INDICATED
- VS — VIBRATION SWITCH
- LS — LEVEL SWITCH
- PS — PRESSURE SWITCH
- FS — FLOW SWITCH
- T — THERMOSTAT
- ELECTRICAL CONNECTION
- CS OR — CONTROL STATION, LOCATION AND FUNCTION AS INDICATED ON SCHEMATIC
- S — SOLENOID OPERATED VALVE
- 15KV 300KVA 480V — TRANSFORMER, SIZE AS INDICATED, PRIMARY AND SECONDARY VOLTAGE AS INDICATED
- AMPS — DRAWOUT TYPE VACUUM BREAKER, SIZE AS INDICATED
- 400A 52 — DRAWOUT TYPE VACUUM BREAKER, SIZE AS INDICATED
- 400A — MEDIUM VOLTAGE FUSED MOTOR CONTROLLER
- DRAWOUT TYPE EQUIPMENT OF DEVICE
- MEDIUM VOLTAGE CABLE TERMINATION
- MEDIUM VOLTAGE AIR INTERRUPTER SWITCH
- MEDIUM VOLTAGE FUSED AIR INTERRUPTER SWITCH
- K1 — MECHANICAL KEY INTERLOCK "K1" DENOTES SEQUENCE K1
- LA — LIGHTING ARRESTER
- JUNCTION BOX
- HAZARDOUS AREA SELL OFF
- SPECIAL CAPACITOR
  - SC – SURGE CAPACITOR
  - PF – POWER FACTOR CORRECTION CAPACITOR
- THREE PHASE DELTA CONNECTION
- THREE PHASE GROUNDED WYE CONNECTION
- THREE PHASE UNGROUNDED WYE CONNECTION
- CONDUIT SEALOFF
- CIRCUIT BREAKER – THERMAL MAGNETIC 3 POLE UNLESS INDICATED OTHERWISE CONTINUOUS AMP TRIP SETTING INDICATED
- XXXA XXXA — CIRCUIT BREAKER WITH CURRENT LIMITING FUSES – TRIP AND FUSE RATING INDICATED. 3 POLE UNLESS INDICATED OTHERWISE.
- XXXA — FUSED SWITCH – SWITCH AND FUSE CURRENT RATING INDICATED. 3 POLE UNLESS INDICATED OTHERWISE.
- XXXA — SWITCH – CURRENT RATING INDICATED. 3 POLE UNLESS INDICATED OTHERWISE
- XXXAF/XXXAT — DRAWOUT AIR CIRCUIT BREAKER LOW VOLTAGE. FRAME SIZE AND TRIP SETTING INDICATED.

MISCELLANEOUS

- P:PLCXXX-XX — PLC POWER WIRE CALLOUT
- C:PLCXXX-XX — PLC CONTROL WIRE CALLOUT
- PPXXX-XX — POWER PANEL WIRE CALLOUT
- LPXXX-XX — LIGHTING PANEL WIRE CALLOUT
- MCCXXX-XX — MCC WIRE CALLOUT
- XXX-XXX-XX — EQUIPMENT CALLOUT
- XX XXX-XX — EQUIPMENT CALLOUT
- XXX-XXX-XX, XXX-XXX-XX — DOUBLE CALLOUT
- XXX-XXX-XX, XXX-XXX-XX, XXX-XXX-XX — TRIPLE WIRE CALLOUT
- ELECTRICAL EQUIPMENT
- XXX — SYMBOL
- XXX XXX — SYMBOL

NOTES

1. ALL ELECTRICAL WORK SHALL BE IN ACCORDANCE WITH THE NATIONAL ELECTRIC CODE AND LOCAL ELECTRICAL CODES.
2. ALL JUNCTION BOXES SHALL BE NEMA 4X, 316 STAINLESS STEEL WITH 316 STAINLESS STEEL MOUNTING HARDWARE.
3. MAINTAIN MAXIMUM PRACTICAL OPEN FLOOR SPACE AND WORKING SPACE AROUND EQUIPMENT. ROUTE CONDUITS SO NOT TO CREATE A TRIPPING HAZARD OR INTERFERE WITH OPERATING EQUIPMENT.
4. CONDUITS SHALL BE CONCEALED TO GREATEST EXTEND POSSIBLE, UNLESS OTHERWISE APPROVED BY OWNER.
5. COORDINATE EXACT EQUIPMENT STUB-UP LOCATIONS WITH EQUIPMENT MANUFACTURER, PRIOR TO ROUGH-IN.
6. EXPOSED CONDUITS SHALL BE ALUMINUM. UNDERGROUND CONDUITS SHALL BE CONCRETE ENCASED PVC-40. CONDUITS TURNING UP OUT OF CONCRETE SHALL BE PVC-COATED ALUMINUM. REFER TO SPECIFICATIONS.
7. EXPOSED CONDUITS IN CHEMICAL TANK STORAGE AREAS AND CHEMICAL BUILDINGS SHALL BE PVC COATED ALUMINUM.
8. ALUMINUM CONDUIT OR UNISTRUT SHALL NOT BE IN DIRECT CONTACT WITH CONCRETE OR GROUT.
9. ALL CONDUIT PENETRATIONS TROUGH MASONRY OR CONCRETE WALLS SHALL BE DONE WITH PVC-COATED ALUMINUM CONDUITS.
10. ALL FASTENERS AND ANCHOR BOLTS SHALL BE STAINLESS STEEL EPOXY TYPE. WASHERS AND NUTS SHALL BE STAINLESS STEEL.
11. THREADED, INSULATED AND GASKETED METALLIC HUBS RATED AS A RAIN-TIGHT CONNECTION SHALL BE USED FOR ALL CONDUITS PENETRATING ALL ENCLOSURES, PANELBOARDS, STARTERS, TERMINATION BOXES, MCC, PLC CABINETS, ETC. BUSHING SHALL BE GROUNDING OR NON-GROUNDING TYPE PER NFPA 70.

ELECTRICAL SYMBOLS

- GROUND ROD
- GROUND TEST WELL
- EXOTHERMIC WELD
- TELEPHONE OUTLET
- COMMUNICATIONS OUTLET
- STRUCTURED WIRE OUTLET
- CONVENIENCE RECEPTACLE, 120V.
- RECEPTACLE, 240V,1PH OR 208V,1PH
- WELDING RECEPTACLE
- M — MOTOR
- FIELD INSTRUMENT OR DEVICE
- PUSH BUTTON CONTROL STATION IN FIELD, LOCATION AND FUNCTION AS INDICATED
- NEMA 4X STAINLESS STEEL JUNCTION BOX
- GROUND
- POWER OR SERVICE POLE
- CONDUIT MARKER
- CONDUIT EXPANSION JOINT
- A LP-2 — CIELING MOUNTED FIXTURE
  - a = DENOTES SWITCH
  - A = DENOTES FIXTURE TYPE
  - LP-2 = DENOTES POWER CIRCUIT
  - SEE FIXTURE SCHEDULE
- X — WALL MOUNTED LIGHT, TYPE AS NOTED
- X — POLE MOUNTED LIGHT, TYPE AS NOTED
- e B LP-2 — FLUORESCENT STRIP LIGHT
  - a = DENOTES SWITCH
  - A = DENOTES FIXTURE TYPE
  - LP-2 = DENOTES POWER CIRCUIT
- UNSWITCHED LIGHT, TYPE AS NOTED
- ES — EMERGENCY EXIT SIGN SEE FIXTURE SCHEDULE
- EMERGENCY FIXTURE SEE FIXTURE SCHEDULE
- ER — EMERGENCY REMOTE LAMP HEADS SEE FIXTURE SCHEDULE
- W — WALL PACK SEE FIXTURE SCHEDULE
- a $3 — 3-POLE LIGHT SWITCH
  - a = DENOTES SWITCH
- a $ — SINGLE LIGHT SWITCH
  - a = DENOTES SWITCH
- CONDUIT TURNING UP
- CONDUIT TURNING DOWN
- CONDUIT END
- UNDERGROUND CONDUIT
- UNDERGROUND DUCTBANK
- EXPOSED CONDUIT
- CONCEALED CONDUIT, AS NOTED ON PLANS
- GROUND WIRE
- CONDUIT HOME RUN
- FLEXIBLE CONDUIT OR CABLE
- S — DETECTOR
- SOLID STATE DEVICE SUCH AS RECTIFIER OR SCR DRIVE.
- ALARM INDICATING DEVICE:
  - BZ = BUZZER
  - CH = CHIME

ELECTRICAL ABBREVIATIONS

A	AMP
AFF	ABOVE FINISH FLOOR
AFG	ABOVE FINISH GRADE
AL	ALUMINUM
AUTO	AUTOMATIC
AUX	AXIAL
AWG	AMERICAN WIRE GAUGE
BATT	BATTERY
BKR	BREAKER
BLDG	BUILDING
C	CONDUCTORS, CONDUIT
C/C	CENTER TO CENTER
CB	CIRCUIT BREAKER
CKT	CIRCUIT
CM	CONDUIT MARKER
CMH	COMMUNICATION MANHOLE
COND	CONDUIT
CPT	CONTROL POWER TRANSFORMER
CT	CURRENT TRANSFORMER
CU	COPPER
DISC	DISCONNECT
DWG	DRAWING
EHU	ELECTRIC UNIT HEATER
EL	ELEVATION
ELEV	ELEVATION
EMH	ELECTRICAL MANHOLE
EMT	ELECTRICAL METALLIC TUBING
ENCL	ENCLOSURE
EP	EXPLOSION PROOF
ETM	ELAPSED TIME METER
EX	EXISTING
EXIST	EXISTING
FDR	FEEDER
FLEX	FLEXIBLE CONDUIT
FLR	FLOOR
FO	FIBER OPTIC
FT	FEET
FUT	FUTURE
FWD	FORWARD
G	GROUND
GALV	GALVANIZED
GEN	GENERATOR
GFI	GROUND FAULT INTERRUPTER
GRD	GROUND
HID	HIGH INTENSITY DISCHARGE
HH	HANDHOLE
HP	HORSEPOWER
HPS	HIGH PRESSURE SODIUM
HZ	HERTZ
I/O	INPUT OUTPUT
INST	INSTANTANEOUS
INSTR	INSTRUMENT
JB	JUNCTION BOX
J-BOX	JUNCTION BOX
kCMIL	1,000 CIRCULAR MILS
KVA	KILO VOLTS AMPERES
KW	KILOWATTS
KWH	KILOWATT HOUR
LO	LOCKOUT
LOC	LOCAL
LOS	LOCKOUT STOP
LTG	LIGHTING
LTS	LIGHTS
M	MOTOR
MA	MILLIAMP
MAN	MANUAL
MCC	MOTOR CONTROL CENTER
MCP	MOTOR CIRCUIT PROTECTOR
MFR	MANUFACTURER
MLO	MAIN LUGS ONLY
MTD	MOUNTED
MTR	MOTOR
N	NEUTRAL
NC	NORMALLY CLOSED
NEU	NEUTRAL
NIC	NOT IN CONTRACT
NO	NORMALLY OPEN
NTS	NOT TO SCALE
OH	OVERHEAD
PB	PULL BOX, PUSHBUTTON
PC	PHOTO CELL
PF	POWER FACTOR
PH	PHASE
PLC	PROGRAMMABLE LOGIC CONTROLLER
PNL	PANEL
POT	POTENTIOMETER
PP	POWER POLE
PQM	POWER QUALITY METER
PR	PAIR
PRI	PRIMARY
PT	POTENTIAL TRANSFORMER
PTT	PUSH TO TEST
PVC	POLYVINYL CHLORIDE
REC	RECEPTACLE
RECPTS	RECEPTACLE
REQ'D	REQUIRED
REV	REVERSE
RGS	RIGID GALVANIZED STEEL
RTD	RESISTANCE TEMPERATURE DETECTORS
RTU	REMOTE TERMINAL UNIT
SCH	SCHEDULE
SEC	SECOND, SECONDARY
SH	SHIELD
SHLD	SHIELDED
SHT	SHEET
SOV	SOLENOID VALVE
SP	SPARE
SS	STAINLESS STEEL
SSTR	SOLID STATE STARTER
STA	STATION
STD	STANDARD
STR	STARTER
SW	SWITCH
TB	TERMINAL BLOCK
TDD	TIME DELAY DE-ENERGIZED
TDE	TIME DELAY ENERGIZED
TERM	TERMINAL
TP	TWISTED PAIR
TSP	TWISTED SHIELDED PAIR
T'STAT	THERMOSTAT
TYP	TYPICAL
UG	UNDERGROUND
V	VOLTAGE
VAC	VOLTAGE ALTERNATING CURRENT
VFD	VARIABLE FREQUENCY DRIVE
W	WATTS, WIRE
WHD	WATTHOUR DEMAND METER
WHM	WATTHOUR METER
WP	WEATHERPROOF
XFRM	TRANSFORMER
XMTR	TRANSMITTER

ALAN PLUMMER ASSOCIATES, INC.
ENVIRONMENTAL ENGINEERS AND SCIENTISTS
6300 LA CALMA DRIVE, SUITE 400
AUSTIN, TEXAS 78752-3843
PHONE: 512-452-5905 FAX: 512-452-2325
TEXAS REGISTERED ENGINEERING FIRM F-13

NO.	DATE	REVISION	BY

CITY OF WIMBERLEY
221 Stillwater
Wimberley, TX 78676

CITY OF WIMBERLEY
WASTEWATER TREATMENT PLANT AND COLLECTION SYSTEM PROJECT

ELECTRICAL

LEGEND

STATE OF TEXAS
PATRICK N. MOSELEY
72794
LICENSED
PROFESSIONAL ENGINEER
12/14/16

BAR IS ONE INCH ON ORIGINAL DRAWING.
ONE INCH

DESIGNED P. MOSELEY
DRAWN APAI
CHECKED P. MOSELEY
REVIEWED P. MOSELEY

Seq. of

Dwg. No. E-001

1732-002-01

PRINTED: 12/14/2016 5:22 PM C:\Projects\1732-002-01\ACAD\SHEETFILES\ELECTRICAL\E-001.dwg SAVED: 12/14/2016 11:08 AM USER: Moseley, Patrick

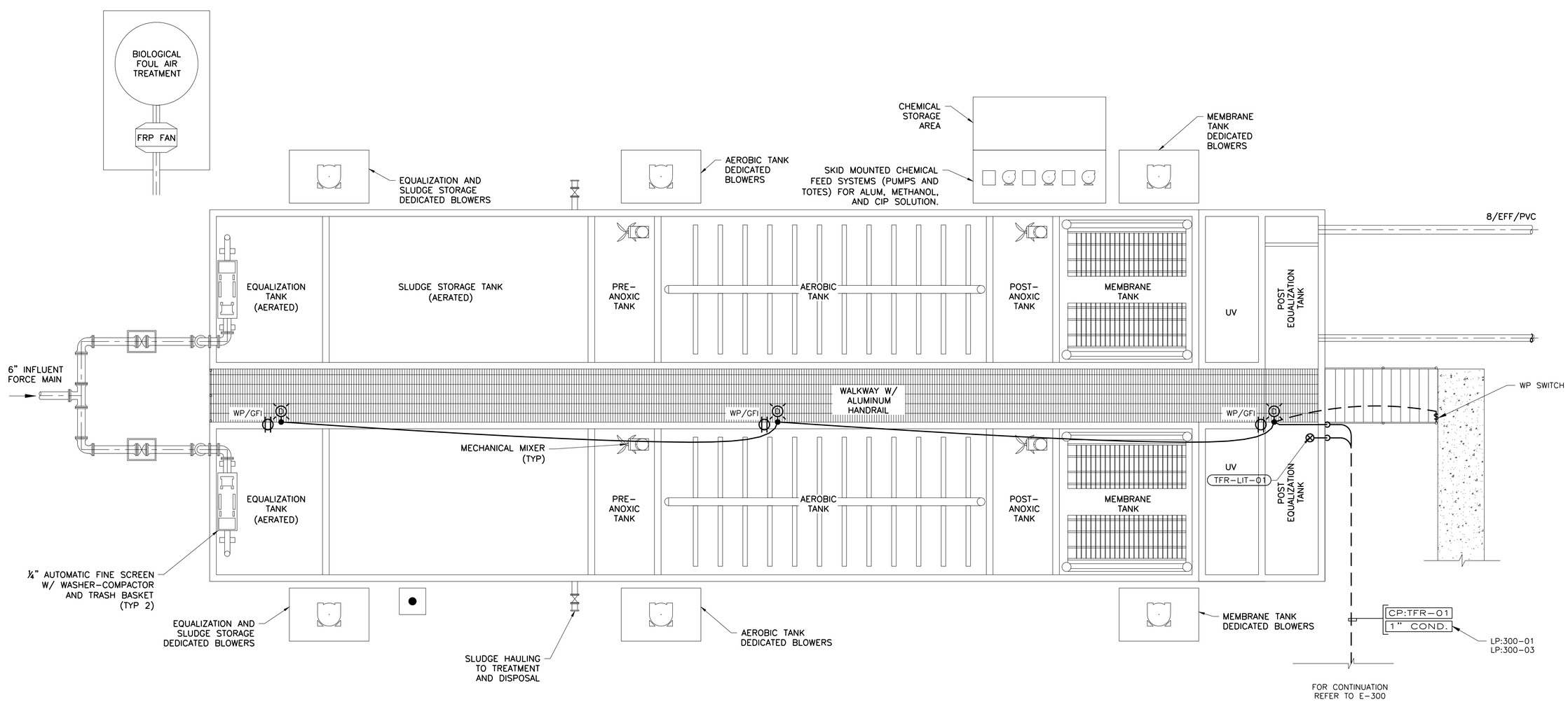

PLAN

SCALE: 1/4"=1'-0"

GENERAL NOTES:

1. REFER TO E-001 FOR ADDITIONAL NOTES.
2. THE WWTP PACKAGE PLANT SUPPLIER SHALL BE RESPONSIBLE FOR THE DELEGATE DESIGN OF THE ELECTRICAL SYSTEM FOR THE WWTP PACKAGE PLANT AND RELATED SUB-SYSTEMS. DESIGN SHALL INCLUDE BUT NOT LIMITED TO THE ELECTRICAL DISTRIBUTION GEAR, STARTERS, VARIABLE FREQUENCY DRIVES, LOCAL CONTROL PANELS, DISCONNECT SWITCHES, AND THE RELATED CONDUIT AND WIRE. THE DESIGN SHALL BE ACCOMPLISHED BY A REGISTERED ELECTRICAL ENGINEER IN THE STATE OF TEXAS, WITH SUBMITTED DRAWINGS WITH ONE-LINE DIAGRAM, COMPLETE WITH SIZING OF BUSSES, BREAKERS, STARTERS AND CONDUIT AND WIRE AT TIME OF SUBMITTED. THE DESIGN SHALL BE AT SUFFICIENT LEVEL TO ALLOW THE CONTRACTOR TO DETERMINE PRICE FOR INSTALLATION AND TO DETERMINE HIS MEANS AND METHODS PRIOR TO BID DATE. DESIGN SHALL BE PER THE NFPA 70, ALL LOCAL AND STATE CODES AND EQUIPMENT SHALL BE IN COMPLIANCE WITH DIVISION 16 SPECIFICATIONS.

ALAN PLUMMER ASSOCIATES, INC.
ENVIRONMENTAL ENGINEERS AND SCIENTISTS
6300 LA CALMA DRIVE, SUITE 400
AUSTIN, TEXAS 78752-3843
PHONE: 512-452-5905 FAX: 512-452-2325
TEXAS REGISTERED ENGINEERING FIRM F-13

NO.	DATE	REVISION	BY

CITY OF WIMBERLEY
221 Stillwater
Wimberley, TX 78676

CITY OF WIMBERLEY
WASTEWATER TREATMENT PLANT AND COLLECTION SYSTEM PROJECT

ELECTRICAL
MBR PACKAGE PLANT PLAN

STATE OF TEXAS
PATRICK N. MOSELEY
72794
LICENSED
PROFESSIONAL ENGINEER
12/14/16

BAR IS ONE INCH ON ORIGINAL DRAWING.
ONE INCH

DESIGNED P. MOSELEY
DRAWN APAI
CHECKED P. MOSELEY
REVIEWED P. MOSELEY

Seq. of

Dwg. No. E-200

1732-002-01

PRINTED: 12/14/2016 5:21 PM C:\Projects\1732-002-01\ACAD\SHEETFILES\ELECTRICAL\E-200.dwg SAVED: 12/4/2016 5:06 PM USER: Moseley, Patrick

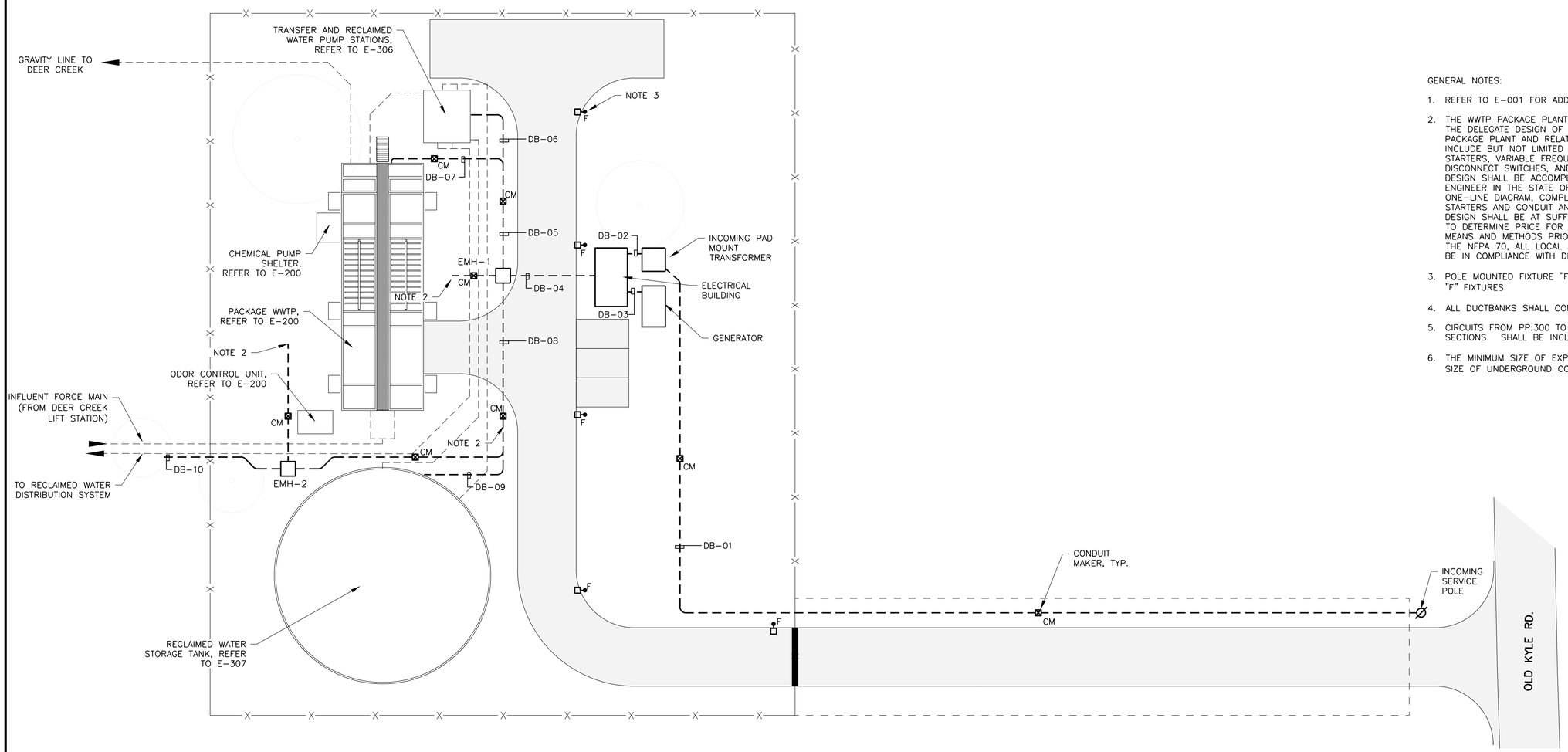

SITE PLAN

GENERAL NOTES:

1. REFER TO E-001 FOR ADDITIONAL NOTES.
2. THE WWTP PACKAGE PLANT SUPPLIER SHALL BE RESPONSIBLE FOR THE DELEGATE DESIGN OF THE ELECTRICAL SYSTEM FOR THE WWTP PACKAGE PLANT AND RELATED SUB-SYSTEMS. DESIGN SHALL INCLUDE BUT NOT LIMITED TO THE ELECTRICAL DISTRIBUTION GEAR, STARTERS, VARIABLE FREQUENCY DRIVES, LOCAL CONTROL PANELS, DISCONNECT SWITCHES, AND THE RELATED CONDUIT AND WIRE. THE DESIGN SHALL BE ACCOMPLISHED BY A REGISTERED ELECTRICAL ENGINEER IN THE STATE OF TEXAS, WITH SUBMITTED DRAWINGS WITH ONE-LINE DIAGRAM, COMPLETE WITH SIZING OF BUSSES, BREAKERS, STARTERS AND CONDUIT AND WIRE AT TIME OF SUBMITTED. THE DESIGN SHALL BE AT SUFFICIENT LEVEL TO ALLOW THE CONTRACTOR TO DETERMINE PRICE FOR INSTALLATION AND TO DETERMINE HIS MEANS AND METHODS PRIOR TO BID DATE. DESIGN SHALL BE PER THE NFPA 70, ALL LOCAL AND STATE CODES AND EQUIPMENT SHALL BE IN COMPLIANCE WITH DIVISION 16 SPECIFICATIONS.
3. POLE MOUNTED FIXTURE "F". ROUTE CIRCUIT LP:300-6,8 TO ALL "F" FIXTURES
4. ALL DUCTBANKS SHALL CONTAIN 4-2" SPARE CONDUITS
5. CIRCUITS FROM PP:300 TO UV SYSTEMS NOT SHOWN IN DUCTBANK SECTIONS. SHALL BE INCLUDED IN DESIGN OF PACKAGE WWTP.
6. THE MINIMUM SIZE OF EXPOSED CONDUITS SHALL BE 3/4", MINIMUM SIZE OF UNDERGROUND CONDUITS SHALL BE 1".

(1) (2)

CONDUIT	CIRCUIT ID
1	4" CONDUIT
2	SB:300-INC1

DUCTBANK 01
NTS

(1) (2)

CONDUIT	CIRCUIT ID
1	SB:300-INC2
2	SB:300-INC2

DUCTBANK 02
NTS

(1) (3) (2) (4)

CONDUIT	CIRCUIT ID
1	CP:WWTP-01
2	1" CONDUIT LP:300-1 LP:300-3
3	GN:200-2
4	GN:200-1

DUCTBANK 03
NTS

(1) (4) (7) (10) (13)
(2) (5) (8) (11) (14)
(3) (6) (9) (12) (15)
NOTE 2 (X) (X) (X) (X) (X)
(X) (X) (X) (X) (X)

CONDUIT	CIRCUIT ID
1	CP:TFR-01
2	CP:IRR-01
3	2" SPARE
4	SB:300-7,9,11A
5	SB:300-7,9,11B
6	2" SPARE
7	CP:WWTP-03
8	CP:RCL-01
9	2" SPARE
10	SB:300-8,10,12A
11	SB:300-8,10,12B
12	2" SPARE
13	2" CONDUIT LP:300-1 LP:300-3
14	2" SPARE-LP:300
15	2" SPARE

DUCTBANK 04
NTS

(2) (4) (6)
(1) (3) (5) (7)
NOTE 2 (X) (X) (X) (X)
(X) (X) (X) (X)

CONDUIT	CIRCUIT ID
1	1" CONDUIT LP:300-1 LP:300-3
2	CP:RCL-01
3	CP:TFR-01
4	SB:300-8,10,12B
5	SB:300-8,10,12A
6	SB:300-7,9,11B
7	SB:300-7,9,11A

DUCTBANK 05
NTS

(1) (2) (4)
(3) (5)

CONDUIT	CIRCUIT ID
1	CP:RCL-01
2	SB:300-8,10,12B
3	SB:300-8,10,12A
4	SB:300-7,9,11B
5	SB:300-7,9,11A

DUCTBANK 06
NTS

NOTE 2 (X) (X) (1)
(X) (X) (2)

CONDUIT	CIRCUIT ID
1	CP:TFR-01
2	1" CONDUIT LP:300-5 LP:300-7

DUCTBANK 07
NTS

(X) (X) (1)
NOTE 2 (X) (X) (2)
(X) (X)
(X) (X)

CONDUIT	CIRCUIT ID
1	CP:WWTP-03
1	CP:IRR-01

DUCTBANK 08
NTS

(1)

CONDUIT	CIRCUIT ID
1	CP:WWTP-03

DUCTBANK 09
NTS

(1)

CONDUIT	CIRCUIT ID
1	CP:IRR-01

DUCTBANK 10
NTS

ALAN PLUMMER ASSOCIATES, INC.
ENVIRONMENTAL ENGINEERS AND SCIENTISTS
6300 LA CALMA DRIVE, SUITE 400
AUSTIN, TEXAS 78752-3843
PHONE: 512-452-5905 FAX: 512-452-2325
TEXAS REGISTERED ENGINEERING FIRM F-13

NO.	DATE	REVISION	BY

CITY OF WIMBERLEY
221 Stillwater
Wimberley, TX 78676

CITY OF WIMBERLEY
WASTEWATER TREATMENT PLANT AND COLLECTION SYSTEM PROJECT
ELECTRICAL

TRANSFER AND RECLAIMED WATER SYSTEM
SITE PLAN

STATE OF TEXAS
PATRICK N. MOSELEY
72794
LICENSED
PROFESSIONAL ENGINEER
12/14/16

BAR IS ONE INCH ON ORIGINAL DRAWING.
ONE INCH

DESIGNED P. MOSELEY
DRAWN APAI
CHECKED P. MOSELEY
REVIEWED P. MOSELEY

Seq. of

Dwg. No. E-300

1732-002-01

PRINTED: 12/14/2016 5:21 PM C:\Projects\1732-002-01\ACAD\SHEETFILES\ELECTRICAL\E-300.dwg SAVED: 12/14/2016 5:17 PM USER: Moseley, Patrick

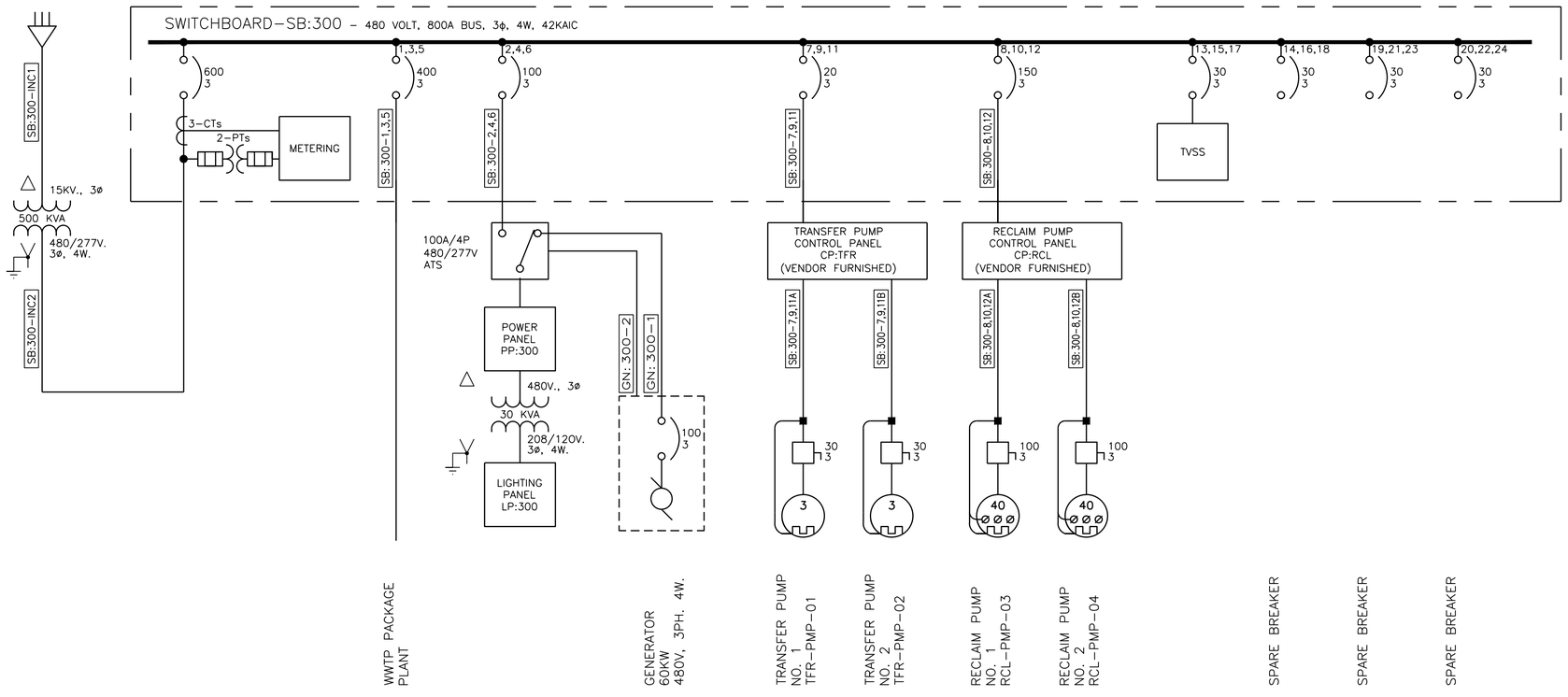

SWITCHBOARD–SB:300 ONELINE

CONDUIT AND WIRE SCHEDULE

CIRCUIT DESIGNATION	CONDUIT	WIRE	FROM	TO
SB:300–INC1	4"	BY POWER COMPANY	WEATHERHEAD	POWER COMPANY TRANSFORMER
SB:300–INC2	2–4"	2 SETS OF 3#350MCM+G	POWER COMPANY TRANSFORMER	AUTOMATIC TRANSFER SWTICH
SB:300–1,3,5	4"	3#500MCM+G	SB:300, CIRCUIT–1,3,5	PACKAGE WWTP PLANT
SB:300–2,4,6	2"	4#3+G	SB:300, CIRCUIT–2,4,6	AUTOMATIC TRANSFER SWITCH
SB:300–2,4,6A	2"	4#3+G	AUTOMATIC TRANSFER SWTICH	SWITCHBOARD SB:300
GN:300–1	2"	4#3+G	AUTOMATIC TRANSFER SWITCH	AUTOMATIC TRANSFER SWITCH
GN:300–2	2"	7#14	AUTOMATIC TRANSFER SWTICH	AUTOMATIC TRANSFER SWTICH
SB:300–7,9,11	2"	3#3/0+G	SB:300, CIRCUIT–7,9,11	TRANSFER PUMP CONTROL PANEL
SB:300–7,9,11A	1"	3#12+G, 7#12	TRANSFER PUMP CONTROL PANEL	TRANSFER PUMP NO. 1
SB:300–7,9,11B	1"	3#12+G, 7#12	TRANSFER PUMP CONTROL PANEL	TRANSFER PUMP NO. 2
SB:300–8,10,12	3"	3#250MCM+G	SB:300, CIRCUIT–8,10,12	RECLAIM PUMP CONTROL PANEL
SB:300–8,10,12A	2"	3#3+G, 7#12	RECLAIM PUMP CONTROL PANEL	RECLAIM PUMP NO. 1
SB:300–8,10,12B	2"	3#3+G, 7#12	RECLAIM PUMP CONTROL PANEL	RECLAIM PUMP NO. 2

GENERAL NOTES:

1. REFER TO E–001 FOR ADDITIONAL NOTES.
2. THE WWTP PACKAGE PLANT SUPPLIER SHALL BE RESPONSIBLE FOR THE DELEGATE DESIGN OF THE ELECTRICAL SYSTEM FOR THE WWTP PACKAGE PLANT AND RELATED SUB–SYSTEMS. DESIGN SHALL INCLUDE BUT NOT LIMITED TO THE ELECTRICAL DISTRIBUTION GEAR, STARTERS, VARIABLE FREQUENCY DRIVES, LOCAL CONTROL PANELS, DISCONNECT SWITCHES, AND THE RELATED CONDUIT AND WIRE. THE DESIGN SHALL BE ACCOMPLISHED BY A REGISTERED ELECTRICAL ENGINEER IN THE STATE OF TEXAS, WITH SUBMITTED DRAWINGS WITH ONE–LINE DIAGRAM, COMPLETE WITH SIZING OF BUSSES, BREAKERS, STARTERS AND CONDUIT AND WIRE AT TIME OF SUBMITTED. THE DESIGN SHALL BE AT SUFFICIENT LEVEL TO ALLOW THE CONTRACTOR TO DETERMINE PRICE FOR INSTALLATION AND TO DETERMINE HIS MEANS AND METHODS PRIOR TO BID DATE. DESIGN SHALL BE PER THE NFPA 70, ALL LOCAL AND STATE CODES AND EQUIPMENT SHALL BE IN COMPLIANCE WITH DIVISION 16 SPECIFICATIONS.
3. THE WWTP PACKAGE PLANT SUPPLIER SHALL UTILIZE SWITCHBOARD SB:300 FOR POWER DISTRIBUTION TO REQUIRED EQUIPMENT AT THE CONTRACTOR'S OPTION. THE WWTP PACKAGE PLANT SUPPLIER AND CONTRACTOR SHALL COORDINATE NUMBER OF BREAKERS AND SIZE AS REQUIRED.
4. THE MINIMUM SIZE OF EXPOSED CONDUITS SHALL BE 3/4", MINIMUM SIZE OF UNDERGROUND CONDUITS SHALL BE 1".

ALAN PLUMMER ASSOCIATES, INC.
ENVIRONMENTAL ENGINEERS AND SCIENTISTS
6300 LA CALMA DRIVE, SUITE 400
AUSTIN, TEXAS 78752-3843
PHONE: 512-452-5905 FAX: 512-452-2325
TEXAS REGISTERED ENGINEERING FIRM F-13

NO.	DATE	REVISION	BY

CITY OF WIMBERLEY
221 Stillwater
Wimberley, TX 78676

CITY OF WIMBERLEY
WASTEWATER TREATMENT PLANT AND COLLECTION SYSTEM PROJECT

ELECTRICAL
TRANSFER AND RECLAIMED WATER SYSTEM ONELINE DIAGRAM

STATE OF TEXAS
PATRICK N. MOSELEY
72794
LICENSED
PROFESSIONAL ENGINEER
12/14/16

BAR IS ONE INCH ON ORIGINAL DRAWING.
ONE INCH

DESIGNED P. MOSELEY
DRAWN APAI
CHECKED P. MOSELEY
REVIEWED P. MOSELEY

Seq. of

Dwg. No. E–301

1732–002–01

PRINTED: 12/14/2016 5:21 PM C:\Projects\1732-002-01\ACAD\SHEETFILES\ELECTRICAL\E-301.dwg SAVED: 12/14/2016 5:04 PM USER: Moseley, Patrick

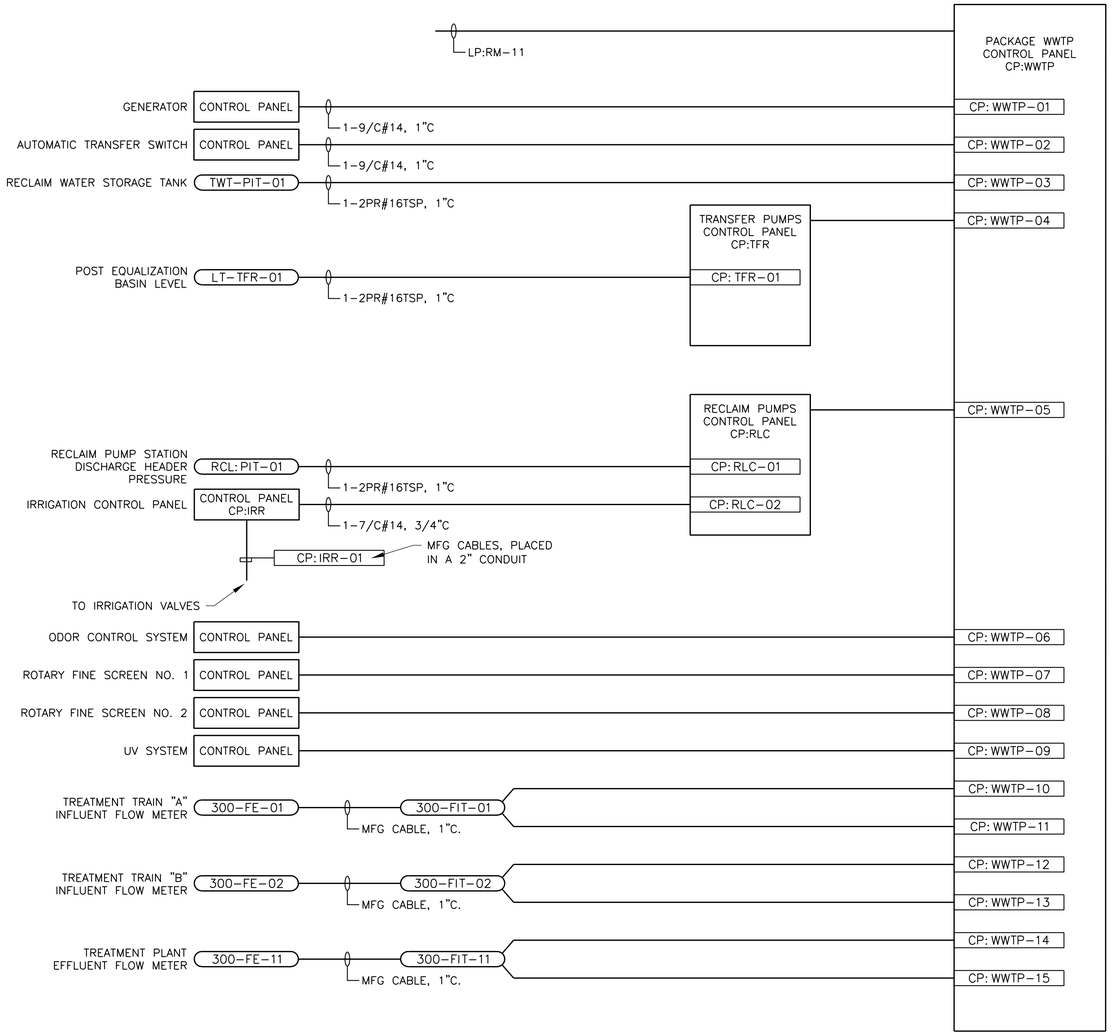

CP:WWTP CONNECTION DIAGRAM

PANEL PP:300

480/277V
3PH. 4W.

100A/3P BREAKER
NEMA 3R

WIRE	COND	DESCRIPTION	BKR	CKT		CKT	BKR	DESCRIPTION	COND	WIRE
12	1	LIGHTING PANEL LP:300	40/3	1		2	20/3	UV SYSTEM TRAIN NO. 1	1	10
				3		4				
				5		6				
–	–	SPARE	20/3	7		8	20/3	UV SYSTEM TRAIN NO. 2	1	10
				9		10				
				11		12				
–	–	SPARE	20/3	13		14	20/3	SPARE	–	–
				15		16				
				17		18				
–	–	SPACE	–	19		20	–	SPACE	–	–
				21		22				
				23		24				

PANEL LP:300

208/120V
3PH. 4W.

100A/3P BREAKER
NEMA 3R

WIRE	COND	DESCRIPTION	BKR	CKT		CKT	BKR	DESCRIPTION	COND	WIRE
12	1	GENERATOR	20/1	1		2	30/1	WWTP PACKAGE PLANT PANEL	1	10
12	1	GENERATOR	20/1	3		4	20/1	IRRIGATION PANEL	1	12
12	1	PACKAGE TREATMENT PLANT LIGHTS	20/1	5		6	20/2	SITE LIGHTING	1	12
12	1	PACKAGE TREATMENT PLANT RECEPT	20/1	7		8				
12	3/4	BUILDING LIGHTS	20/1	9		10	20/1	SPARE	–	–
12	3/4	BUILDING RECEPTACLES	20/1	11		12	20/1	SPARE	–	–
12	3/4	EMERGENCY LIGHTS	20/1	13		14	20/1	SPARE	–	–
–	–	SPARE (RESERVED FOR HEAT TRACE)	20/1*	15		16	20/1	SPARE	–	–
–	–	SPARE (RESERVED FOR HEAT TRACE)	20/1*	17		18	20/1	SPARE	–	–
–	–	SPARE BREAKER	40/3	19		20	20/1	SPARE	–	–
				21		22	50/2	AC UNIT	1	6
				23		24				

*GFIC BREAKER

GENERAL NOTES:

1. REFER TO E-001 FOR ADDITIONAL NOTES.
2. THE WWTP PACKAGE PLANT SUPPLIER SHALL BE RESPONSIBLE FOR THE DELEGATE DESIGN OF THE ELECTRICAL SYSTEM FOR THE WWTP PACKAGE PLANT AND RELATED SUB-SYSTEMS. DESIGN SHALL INCLUDE BUT NOT LIMITED TO THE ELECTRICAL DISTRIBUTION GEAR, STARTERS, VARIABLE FREQUENCY DRIVES, LOCAL CONTROL PANELS, DISCONNECT SWITCHES, AND THE RELATED CONDUIT AND WIRE. THE DESIGN SHALL BE ACCOMPLISHED BY A REGISTERED ELECTRICAL ENGINEER IN THE STATE OF TEXAS, WITH SUBMITTED DRAWINGS WITH ONE-LINE DIAGRAM, COMPLETE WITH SIZING OF BUSSES, BREAKERS, STARTERS AND CONDUIT AND WIRE AT TIME OF SUBMITTED. THE DESIGN SHALL BE AT SUFFICIENT LEVEL TO ALLOW THE CONTRACTOR TO DETERMINE PRICE FOR INSTALLATION AND TO DETERMINE HIS MEANS AND METHODS PRIOR TO BID DATE. DESIGN SHALL BE PER THE NFPA 70, ALL LOCAL AND STATE CODES AND EQUIPMENT SHALL BE IN COMPLIANCE WITH DIVISION 16 SPECIFICATIONS.
3. THE MINIMUM SIZE OF EXPOSED CONDUITS SHALL BE 3/4", MINIMUM SIZE OF UNDERGROUND CONDUITS SHALL BE 1".

ALAN PLUMMER ASSOCIATES, INC.
ENVIRONMENTAL ENGINEERS AND SCIENTISTS
6300 LA CALMA DRIVE, SUITE 400
AUSTIN, TEXAS 78752-3843
PHONE: 512-452-5905 FAX: 512-452-2325
TEXAS REGISTERED ENGINEERING FIRM F-13

NO.	DATE	REVISION	BY

CITY OF WIMBERLEY
221 Stillwater
Wimberley, TX 78676

CITY OF WIMBERLEY
WASTEWATER TREATMENT PLANT AND COLLECTION SYSTEM PROJECT

ELECTRICAL
TRANSFER AND RECLAIMED WATER SYSTEM SCHEDULES AND DIAGRAMS

STATE OF TEXAS
PATRICK N. MOSELEY
72794
LICENSED
PROFESSIONAL ENGINEER
12/14/16

BAR IS ONE INCH ON ORIGINAL DRAWING.
ONE INCH

DESIGNED P. MOSELEY
DRAWN APAI
CHECKED P. MOSELEY
REVIEWED P. MOSELEY

Seq. of

Dwg. No. E-302

1732-002-01

PRINTED: 12/14/2016 5:21 PM C:\Projects\1732-002-01\ACAD\SHEETFILES\ELECTRICAL\E-302.dwg SAVED: 12/14/2016 5:17 PM USER: Moseley, Patrick

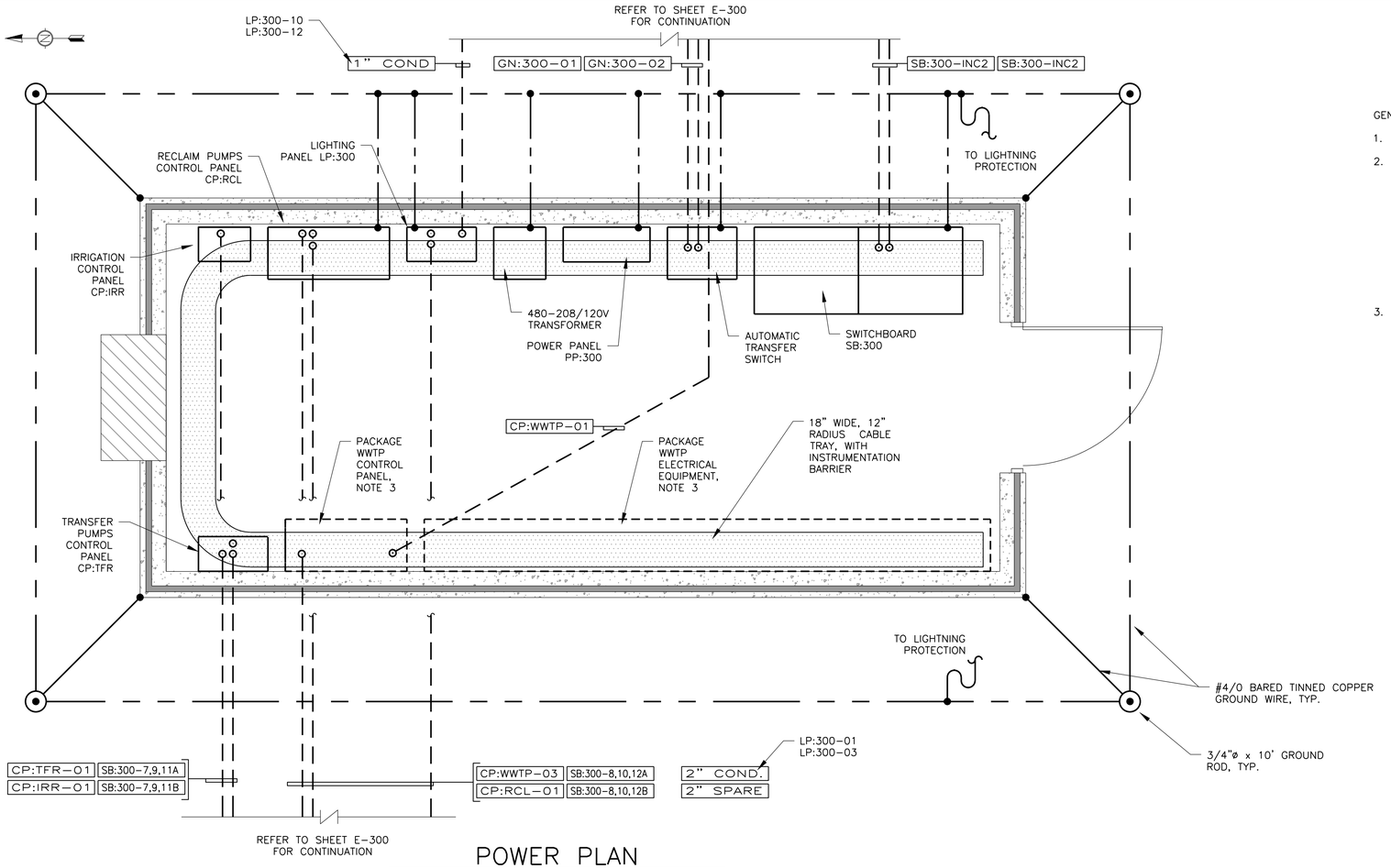

POWER PLAN

SCALE: 1/2" = 1'-0"

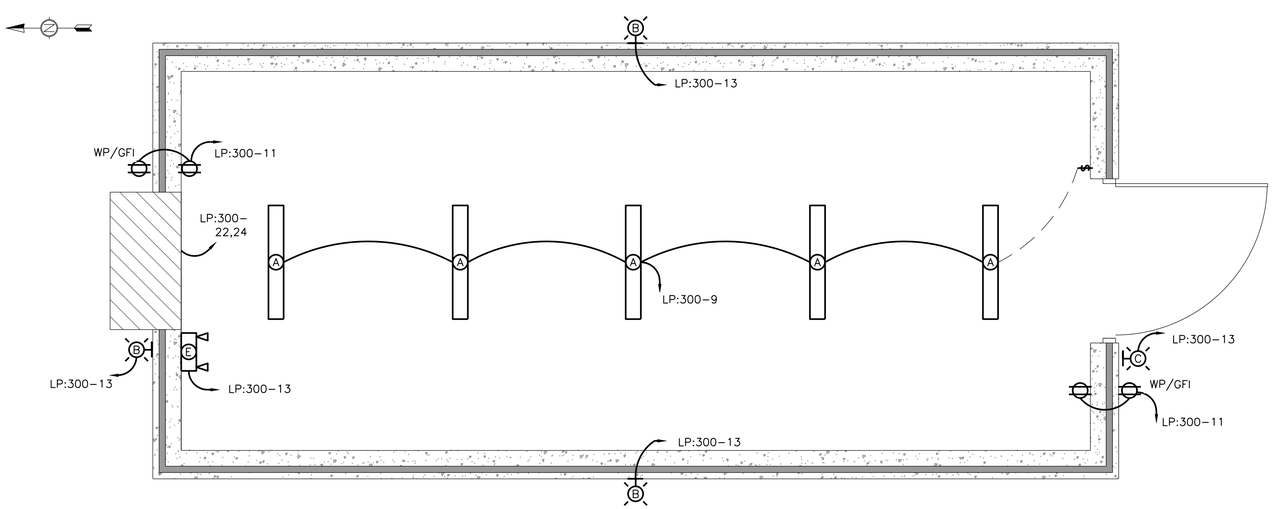

LIGHTING PLAN

SCALE: 1/2" = 1'-0"

GENERAL NOTES:

1. REFER TO E-001 FOR ADDITIONAL NOTES.
2. THE WWTP PACKAGE PLANT SUPPLIER SHALL BE RESPONSIBLE FOR THE DELEGATE DESIGN OF THE ELECTRICAL SYSTEM FOR THE WWTP PACKAGE PLANT AND RELATED SUB-SYSTEMS. DESIGN SHALL INCLUDE BUT NOT LIMITED TO THE ELECTRICAL DISTRIBUTION GEAR, STARTERS, VARIABLE FREQUENCY DRIVES, LOCAL CONTROL PANELS, DISCONNECT SWITCHES, AND THE RELATED CONDUIT AND WIRE. THE DESIGN SHALL BE ACCOMPLISHED BY A REGISTERED ELECTRICAL ENGINEER IN THE STATE OF TEXAS, WITH SUBMITTED DRAWINGS WITH ONE-LINE DIAGRAM, COMPLETE WITH SIZING OF BUSSES, BREAKERS, STARTERS AND CONDUIT AND WIRE AT TIME OF SUBMITTED. THE DESIGN SHALL BE AT SUFFICIENT LEVEL TO ALLOW THE CONTRACTOR TO DETERMINE PRICE FOR INSTALLATION AND TO DETERMINE HIS MEANS AND METHODS PRIOR TO BID DATE. DESIGN SHALL BE PER THE NFPA 70, ALL LOCAL AND STATE CODES AND EQUIPMENT SHALL BE IN COMPLIANCE WITH DIVISION 16 SPECIFICATIONS.
3. IF THE WWTP PACKAGE EQUIPMENT REQUIRES ADDITIONAL SPACE LARGER THAN THAT RESERVED, THE BUILDING SHALL BE MADE LARGER AT NO ADDITIONAL COST TO THE CONTRACT.

ALAN PLUMMER ASSOCIATES, INC.
ENVIRONMENTAL ENGINEERS AND SCIENTISTS
6300 LA CALMA DRIVE, SUITE 400
AUSTIN, TEXAS 78752-3843
PHONE: 512-452-5905 FAX: 512-452-2325
TEXAS REGISTERED ENGINEERING FIRM F-13

NO.	DATE	REVISION	BY

CITY OF WIMBERLEY
221 Stillwater
Wimberley, TX 78676

CITY OF WIMBERLEY
WASTEWATER TREATMENT PLANT AND COLLECTION SYSTEM PROJECT

ELECTRICAL
TRANSFER AND RECLAIMED WATER SYSTEM
BUILDING POWER PLAN

STATE OF TEXAS
PATRICK N. MOSELEY
72794
LICENSED
PROFESSIONAL ENGINEER
12/14/16

BAR IS ONE INCH ON ORIGINAL DRAWING.
ONE INCH

DESIGNED	P. MOSELEY
DRAWN	APAI
CHECKED	P. MOSELEY
REVIEWED	P. MOSELEY

Seq. of

Dwg. No. E-303

1732-002-01

PRINTED: 12/14/2016 5:21 PM C:\Projects\1732-002-01\ACAD\SHEETFILES\ELECTRICAL\E-303.dwg SAVED: 12/4/2016 4:28 PM USER: Moseley, Patrick

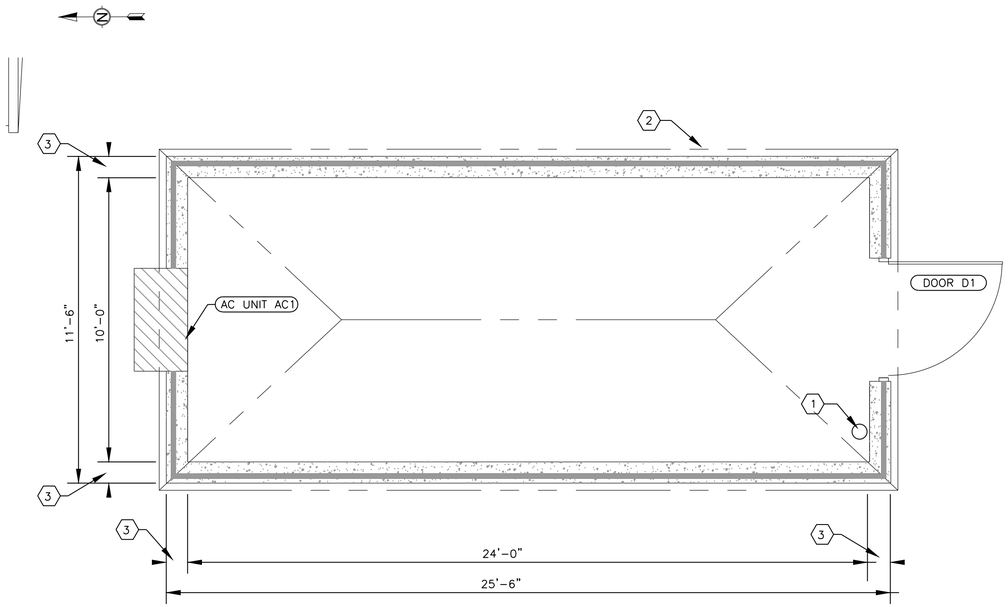

BUILDING PLAN

SCALE: 3/8" = 1'-0"

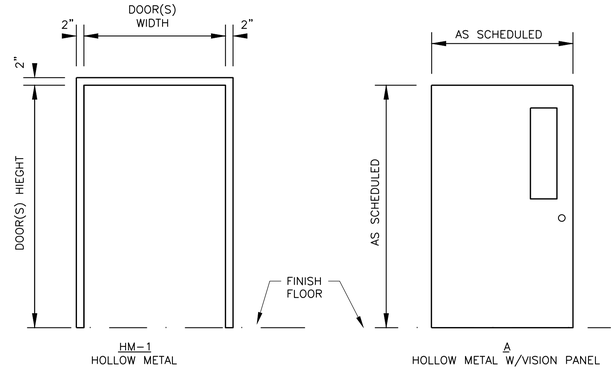

FRAME TYPES

N.T.S.

DOOR TYPES

N.T.S.

DOOR SCHEDULE

NUMBER	TYPE	SIZE (WxH)	HDW	FRAME	REMARKS
ALUM BUILDING					
D1	A	4'-0"x8'-0"	HDW	HM-1	1

DOOR SCHEDULE GENERAL NOTES

1. ALL TYPE A DOORS ARE 1 3/4" THICK TYPICAL.
2. ALL DOORS AND FRAMES ARE FACTORY PAINTED.
3. ALL DOORS AND FRAMES ARE INSULATED.
4. ALL DOORS FURNISHED WITH DRIP LEDGE.

REMARKS

1. DOOR FRAMES MAY BE CAST INTO THE CONCRETE PANEL IN LIEU OF SITE INSTALLED FRAMES AS DETAILED, AT BUILDING MANUFACTURER'S OPTION.

AC UNIT SCHEDULE

DESIGNATION:	AC-1
LOCATION:	ELECTRICAL BUILDING
SEER:	10.1
RATED CFM 1st Stage:	1300
ELECTRICAL: V/ϕ/Hz	208/3/60
SIMILAR TO:	BARD W*5S
COLOR:	BEIGE
ACCESSORIES:	LOW TEMPERATURE OPERATION CONFORMAL COATING COILS

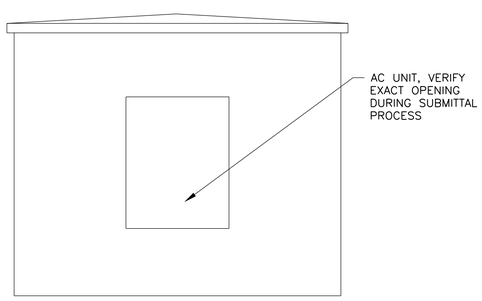

ELEVATION

SCALE: 3/8" = 1'-0"

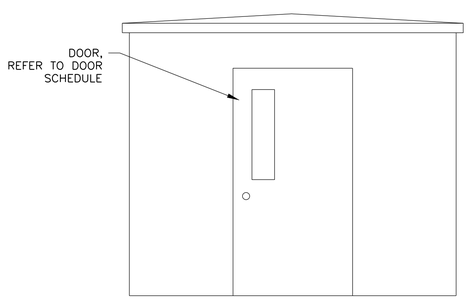

ELEVATION

SCALE: 3/8" = 1'-0"

NOTES BY SYMBOL ⬡

1. FIRE EXTINGUISHER ON BRACKET MOUNTED AT 3'-6" ABOVE FINISH FLOOR TO HANDLE.
2. PRECAST BUILDING ROOF LINE ABOVE, EXTENDS 3" BEYOND WALLS.
3. PRECAST BUILDING WALLS, MANUFACTURERS' STANDARD WALL THICKNESS TO PROVIDE STRUCTURAL STRENGTH AND SPECIFIED THERMAL VALVE. SHOWN AND DIMENSIONED AS 9" FOR REFERENCE PROPOSES. INTERIOR DIMENSIONS SHALL REMAIN FIRM.

ALAN PLUMMER ASSOCIATES, INC.
ENVIRONMENTAL ENGINEERS AND SCIENTISTS
6300 LA CALMA DRIVE, SUITE 400
AUSTIN, TEXAS 78752-3843
PHONE: 512-452-5905 FAX: 512-452-2325
TEXAS REGISTERED ENGINEERING FIRM F-13

NO.	DATE	REVISION	BY

CITY OF WIMBERLEY
221 Stillwater
Wimberley, TX 78676

CITY OF WIMBERLEY
WASTEWATER TREATMENT PLANT AND COLLECTION SYSTEM PROJECT

TRANSFER AND RECLAIMED WATER SYSTEM

BUIDLING PLAN AND DETAILS

STATE OF TEXAS
PATRICK N. MOSELEY
72794
LICENSED
PROFESSIONAL ENGINEER
12/14/16

BAR IS ONE INCH ON ORIGINAL DRAWING.
ONE INCH

DESIGNED P. MOSELEY
DRAWN APAI
CHECKED P. MOSELEY
REVIEWED P. MOSELEY

Seq. of

Dwg. No. E-304

1732-002-01

PRINTED: 12/14/2016 5:20 PM C:\Projects\1732-002-01\ACAD\SHEETFILES\ELECTRICAL\E-304.dwg SAVED: 12/4/2016 12:47 PM USER: Moseley, Patrick

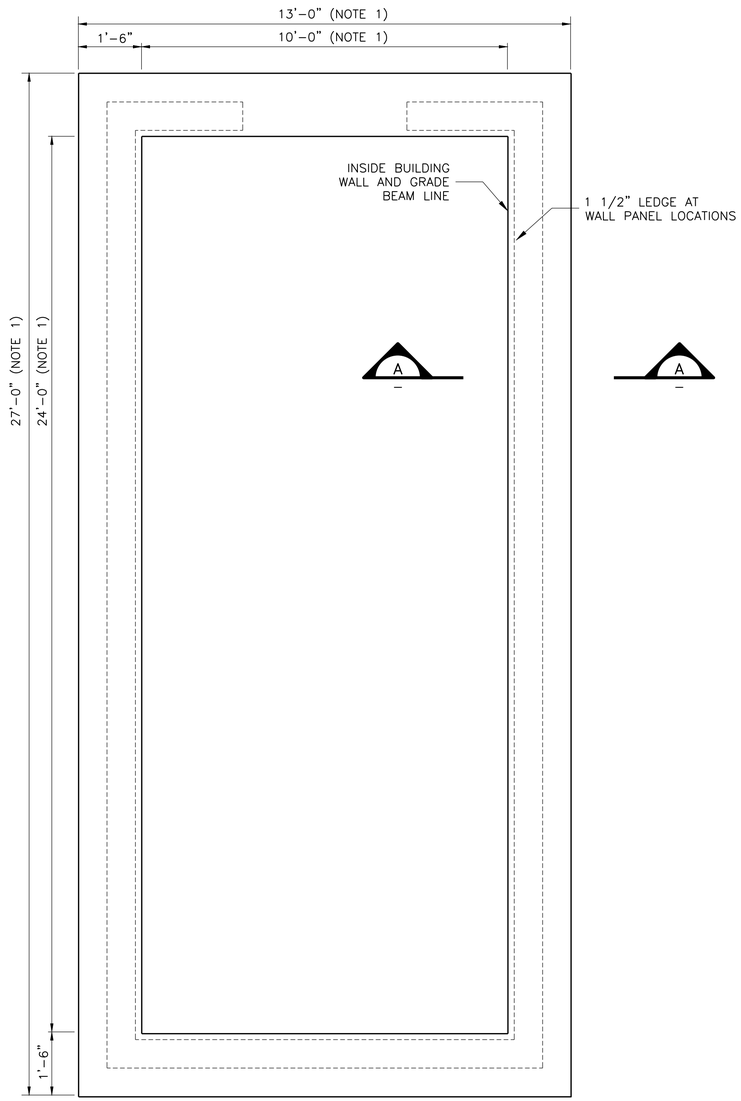

ELECTRICAL BUILDING PAD NOTES:

1. VERIFY PAD DIMENSIONS WITH THE BUILDING MANUFACTURER. DIMENSIONS BASED UPON INSIDE BUILDING DIMENSIONS OF 10'-0" x 14'-0".

ELECTRICAL BUILDING
FOUNDATION PLAN
SCALE: 1/2"=1'-0"

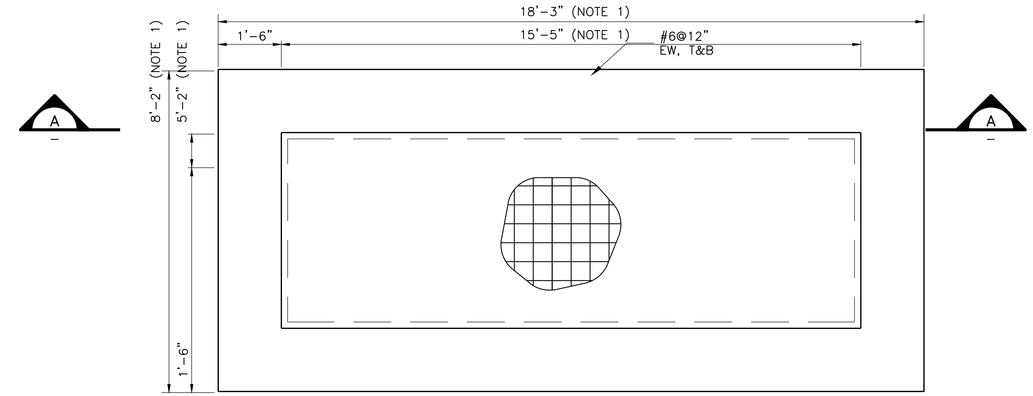

GENERATOR PAD
FOUNDATION PLAN
SCALE: 1/2"=1'-0"

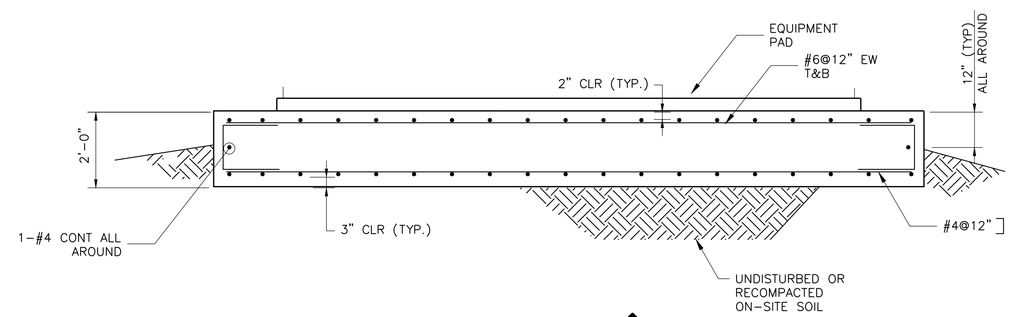

SECTION A
SCALE: 1/2" = 1'-0"

GENERATOR PAD NOTES:

1. VERIFY PAD DIMENSIONS WITH THE GENERATOR MANUFACTURER. DIMENSIONS BASED UPON GENERATOR FOOT PRINT OF 4'-10" x 15'-1".

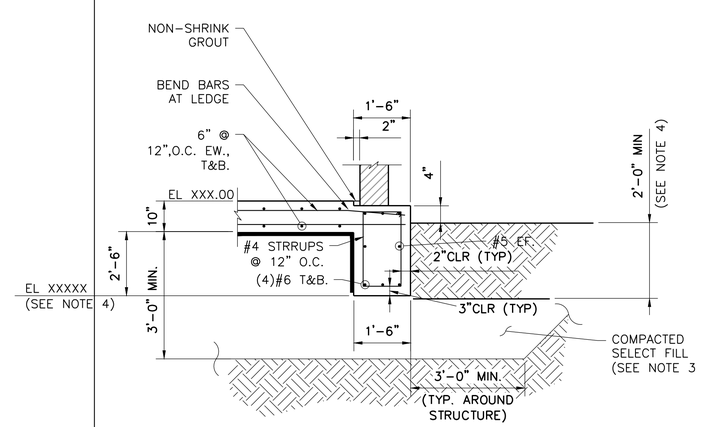

TYPICAL EXTERIOR BEAM
SECTION A
SCALE: 1/2"=1'-0"

NOTES:

1. SEE SITE PLAN FOR STRUCTURE LOCATION COORDINATES AND GRADE.
2. VERIFY EQUIPMENT PAD DIMENSIONS AND LOCATIONS SHOWN WITH ELECTRICAL DRAWINGS.
3. REFER TO TYPICAL EXCAVATION AND BACKFILL DETAIL ON THE STRUCTURAL STANDARD DETAILS SHEET FOR EXCAVATION, SUBGRADE PREPARATION, AND BACKFILL REQUIREMENTS.
4. THE BOTTOM OF GRADE BEAMS SHALL BE PLACED 2' MINIMUM BELOW GRADE OR AT THE ELEVATION INDICATED ON THE PLAN, WHICHEVER IS DEEPER.

ALAN PLUMMER ASSOCIATES, INC.
ENVIRONMENTAL ENGINEERS AND SCIENTISTS
6300 LA CALMA DRIVE, SUITE 400
AUSTIN, TEXAS 78752-3843
PHONE: 512-452-5905 FAX: 512-452-2325
TEXAS REGISTERED ENGINEERING FIRM F-13

NO.	DATE	REVISION	BY

CITY OF WIMBERLEY
221 Stillwater
Wimberley, TX 78676

CITY OF WIMBERLEY
WASTEWATER TREATMENT PLANT AND COLLECTION SYSTEM PROJECT
TRANSFER AND RECLAIMED WATER SYSTEM
BUILDING AND GENERATOR FOUNDATIONS

STATE OF TEXAS
PATRICK N. MOSELEY
72794
LICENSED
PROFESSIONAL ENGINEER
12/14/16

BAR IS ONE INCH ON ORIGINAL DRAWING.
ONE INCH

DESIGNED	P. MOSELEY
DRAWN	APAI
CHECKED	P. MOSELEY
REVIEWED	P. MOSELEY

Seq. of
Dwg. No. E-305
1732-002-01

PRINTED: 12/14/2016 5:20 PM C:\Projects\1732-002-01\ACAD\SHEETFILES\ELECTRICAL\E-305.dwg SAVED: 12/14/2016 11:03 AM USER: Moseley, Patrick

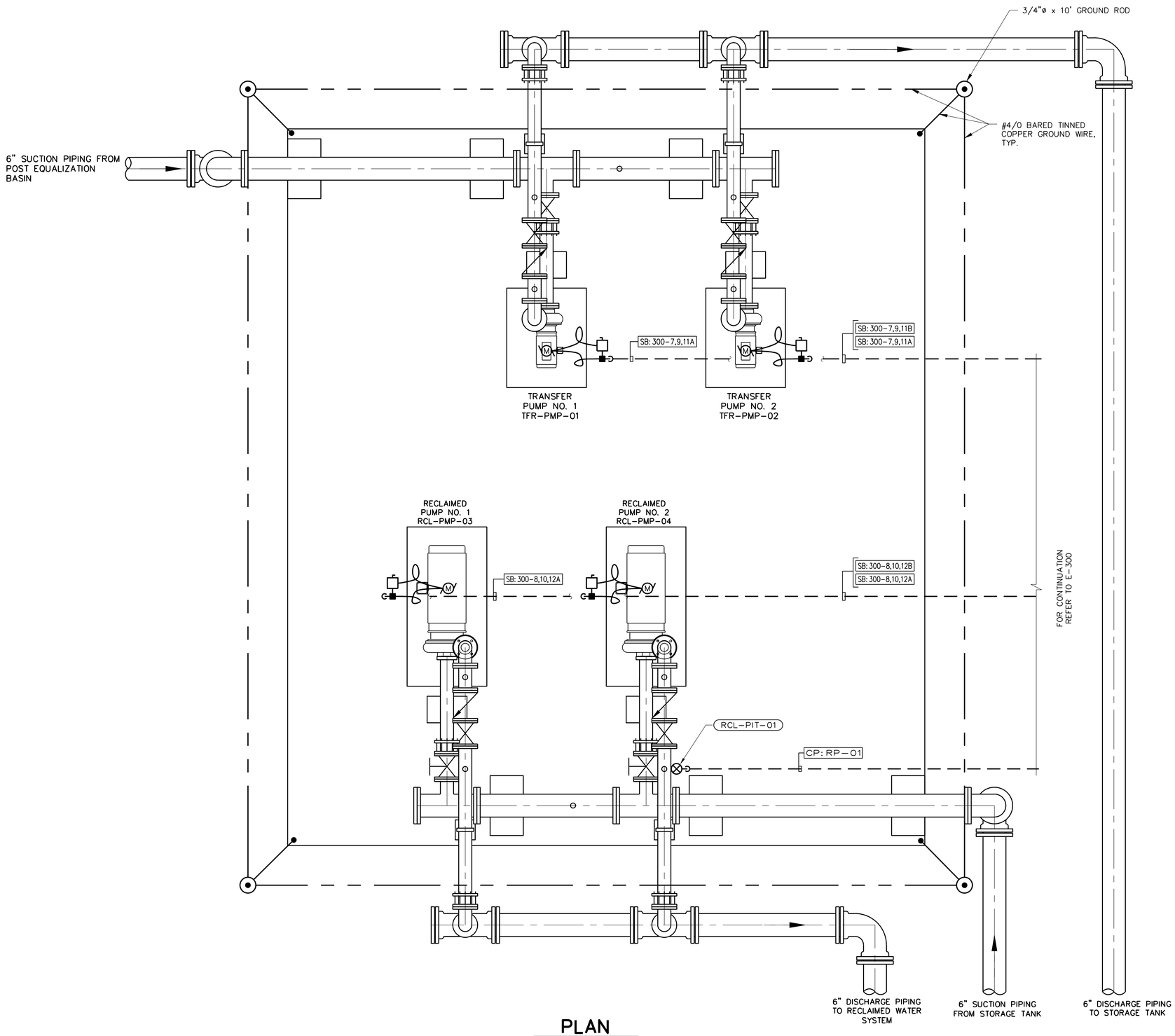

PLAN

SCALE: 3/4"=1'-0"

GENERAL NOTES:

1. REFER TO E-001 FOR ADDITIONAL NOTES.

ALAN PLUMMER ASSOCIATES, INC.
ENVIRONMENTAL ENGINEERS AND SCIENTISTS
6300 LA CALMA DRIVE, SUITE 400
AUSTIN, TEXAS 78752-3843
PHONE: 512-452-5905 FAX: 512-452-2325
TEXAS REGISTERED ENGINEERING FIRM F-13

NO.	DATE	REVISION	BY

CITY OF WIMBERLEY
221 Stillwater
Wimberley, TX 78676

CITY OF WIMBERLEY
WASTEWATER TREATMENT PLANT AND COLLECTION SYSTEM PROJECT

ELECTRICAL
TRANSFER AND RECLAIMED WATER SYSTEM PUMP STATION PLAN

STATE OF TEXAS
PATRICK N. MOSELEY
72794
LICENSED
PROFESSIONAL ENGINEER
12/14/16

BAR IS ONE INCH ON ORIGINAL DRAWING.
ONE INCH

DESIGNED P. MOSELEY
DRAWN APAI
CHECKED P. MOSELEY
REVIEWED P. MOSELEY

Seq. of

Dwg. No. E-306

1732-002-01

PRINTED: 12/14/2016 5:20 PM C:\Projects\1732-002-01\ACAD\SHEETFILES\ELECTRICAL\E-306.dwg SAVED: 12/14/2016 5:17 PM USER: Moseley, Patrick

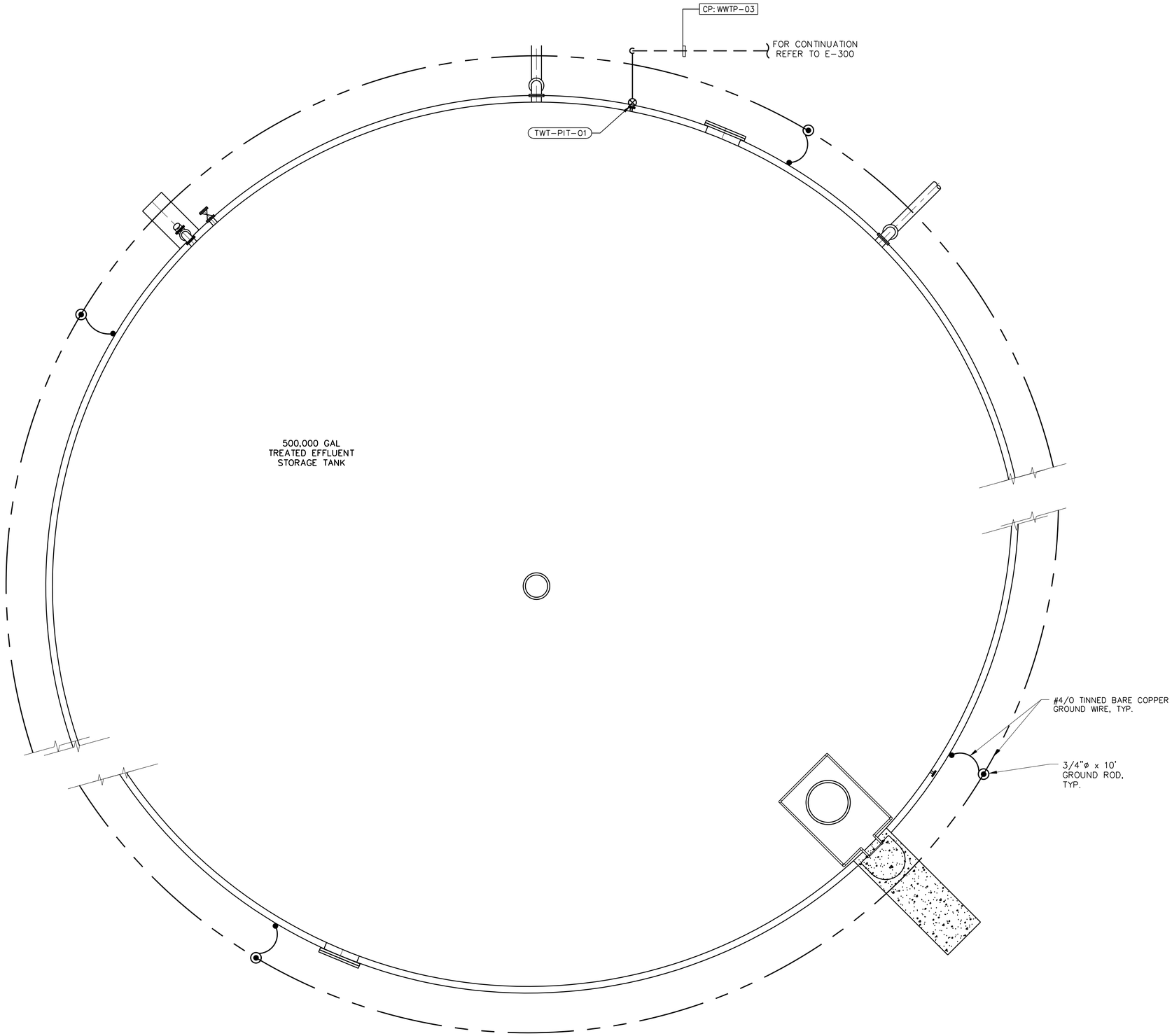

PLAN

SCALE: 1/4"=1'-0"

ALAN PLUMMER ASSOCIATES, INC.
ENVIRONMENTAL ENGINEERS AND SCIENTISTS
6300 LA CALMA DRIVE, SUITE 400
AUSTIN, TEXAS 78752-3843
PHONE: 512-452-5905 FAX: 512-452-2325
TEXAS REGISTERED ENGINEERING FIRM F-13

NO.	DATE	REVISION	BY

CITY OF WIMBERLEY
221 Stillwater
Wimberley, TX 78676

CITY OF WIMBERLEY
WASTEWATER TREATMENT PLANT AND COLLECTION SYSTEM PROJECT

ELECTRICAL
TRANSFER AND RECLAIMED WATER SYSTEM STORAGE TANK PLAN

STATE OF TEXAS
PATRICK N. MOSELEY
72794
LICENSED
PROFESSIONAL ENGINEER
12/14/16

BAR IS ONE INCH ON ORIGINAL DRAWING.
ONE INCH

DESIGNED P. MOSELEY
DRAWN APAI
CHECKED P. MOSELEY
REVIEWED P. MOSELEY

Seq. of

Dwg. No. E-307

1732-002-01

PRINTED: 12/14/2016 5:20 PM C:\Projects\1732-002-01\ACAD\SHEETFILES\ELECTRICAL\E-307.dwg SAVED: 12/14/2016 10:19 AM USER: Moseley, Patrick

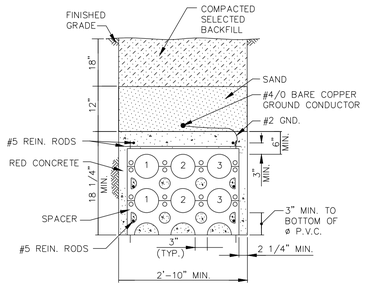

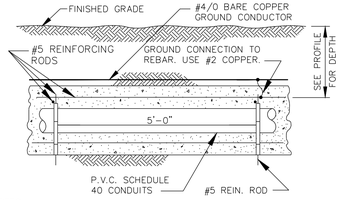

NOTES:

1. CONDUIT TO BE P.V.C. CONDUIT TYPE 40 FOR CONCRETE ENCASEMENT, SIZE AND NUMBER AS INDICATED ON DRAWING.
2. CONCRETE ENCASEMENT: ALL CONCRETE TO HAVE COMPRESSIVE STRENGTH OF 2800 P.S.I. AT 28 DAYS. NO AGGREGATE LARGER THAN 3/4".
3. INSTALL SPACERS EVERY 5 FEET. ALL SPACERS TO PROVIDE 3" VERTICAL AND HORIZONTAL SEPARATION BETWEEN CONDUITS.
4. INSTALL #5 STEEL REINFORCING RODS THROUGH THE INTERNAL VERTICAL CHANNELS AT BOTH OUTER EDGES OF SPACER AND DRIVE REINFORCING RODS INTO EARTH TO ANCHOR ASSEMBLY.
5. INSTALL #5 STEEL REINFORCING RODS ACROSS TOP OF CAP AND IN EACH CORNER OF THE CONCRETE ENCASEMENT.
6. TIE HORIZONTAL AND VERTICAL RODS TOGETHER WITH #16 STEEL TIE WIRE.
7. GROUND THE STEEL REINFORCING RODS AT 20 FEET SPANS MAXIMUM. CONNECT TO 4/0 GROUND CONDUCTOR ON TOP OF DUCT BANK.

E01 DUCTBANK CONDUIT SPACERS
SCALE: N.T.S.

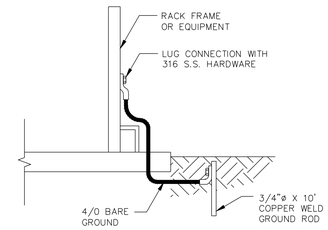

E02 EQUIPMENT GROUNDING
SCALE: N.T.S.

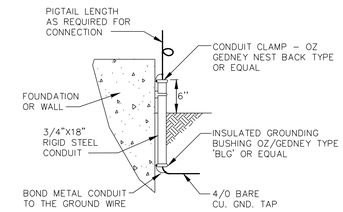

E03 GROUNDING STUB AT WALL
SCALE: N.T.S.

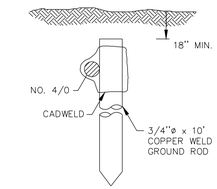

E04 GROUND ROD
SCALE: N.T.S.

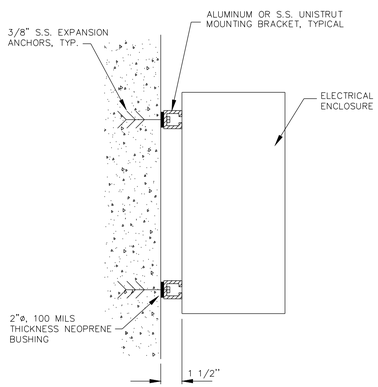

E12 EQUIPMENT PANEL WALL MOUNTING
SCALE: N.T.S.

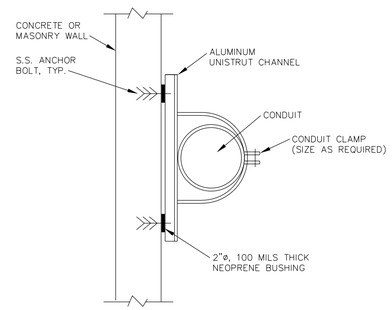

E06 CONDUIT WALL SUPPORT
SCALE: N.T.S.

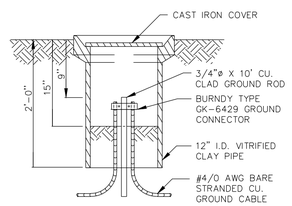

E07 GROUND ROD TEST WELL
SCALE: N.T.S.

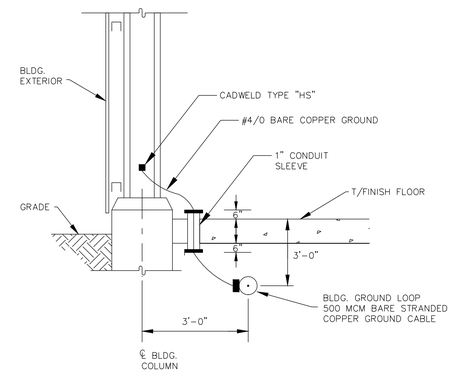

E08 STEEL COLUMN GROUND
SCALE: N.T.S.

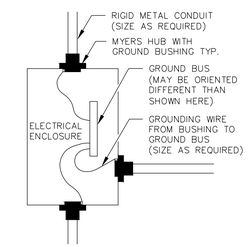

E09 CONDUIT GROUNDING AT ENCLOSURE
SCALE: N.T.S.

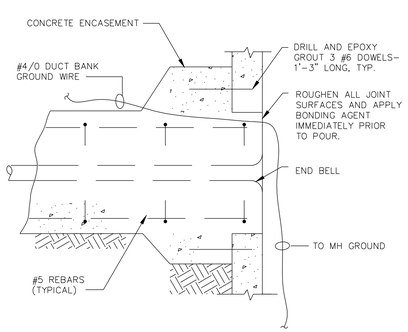

E10 DUCTBACK CONCRETE PENETRATION
SCALE: N.T.S.

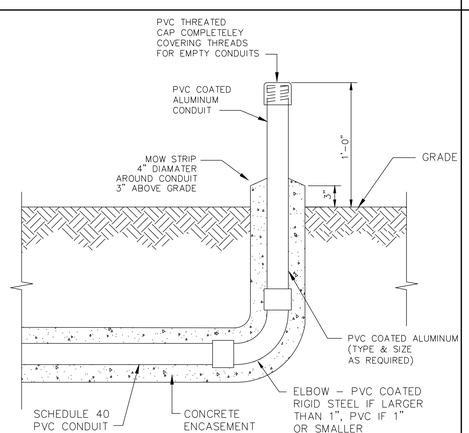

E11 CONDUIT GROUND PENETRATION
SCALE: N.T.S.

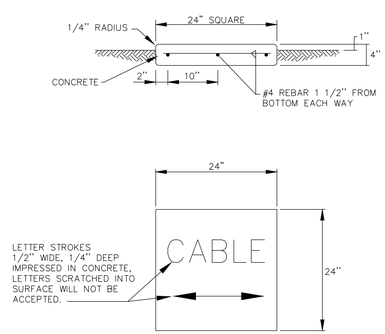

NOTE: ARROWS SHALL INDICATE DIRECTION OF DUCT BANK.

E12 DUCTBANK MARKER
SCALE: N.T.S.

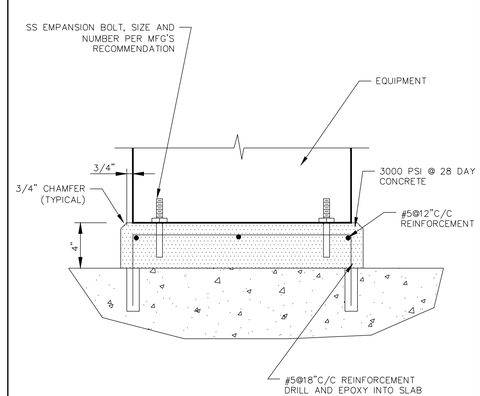

E13 CONCRETE EQUIPMENT PAD
SCALE: N.T.S.

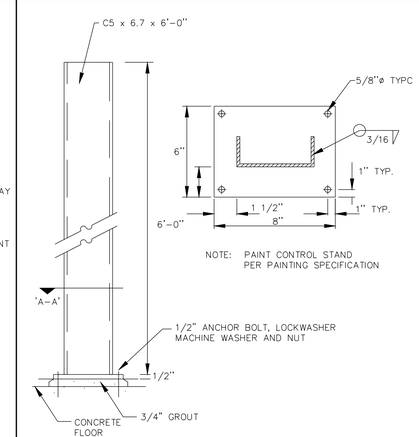

E14 CONTROL STAND
SCALE: N.T.S.

ALAN PLUMMER ASSOCIATES, INC.
ENVIRONMENTAL ENGINEERS AND SCIENTISTS
6300 LA CALMA DRIVE, SUITE 400
AUSTIN, TEXAS 78752-3843
PHONE: 512-452-5905 FAX: 512-452-2325
TEXAS REGISTERED ENGINEERING FIRM F-13

NO.	DATE	REVISION	BY

CITY OF WIMBERLEY
221 Stillwater
Wimberley, TX 78676

CITY OF WIMBERLEY
WASTEWATER TREATMENT PLANT AND COLLECTION SYSTEM PROJECT

ELECTRICAL
STANDARD DETAILS
DETAILS I

STATE OF TEXAS
PATRICK N. MOSELEY
72794
LICENSED
PROFESSIONAL ENGINEER
12/14/16

BAR IS ONE INCH ON ORIGINAL DRAWING.
ONE INCH

DESIGNED P. MOSELEY
DRAWN APAI
CHECKED P. MOSELEY
REVIEWED P. MOSELEY

Seq. of
Dwg. No. E-900
1732-002-01

PRINTED: 12/14/2016 5:20 PM C:\Projects\1732-002-01\ACAD\SHEETFILES\ELECTRICAL\E-900.dwg SAVED: 12/14/2016 4:45 PM USER: Moseley, Patrick

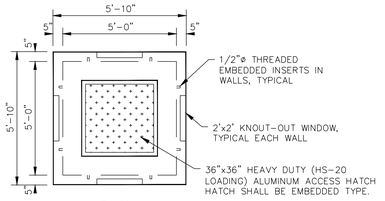

PLAN

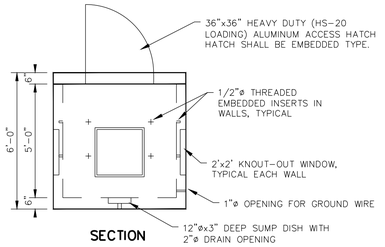

SECTION

NOTES:

1. PROVIDE GALVANIZED STEEL EMBED PULLING IRONS ON EACH WALL.
2. PROVIDE NON-METALIC CABLE RACK SYSTEM.
3. PROVIDE 6", 12" OR 24" MANHOLE RINGS AS NECESSARY TO RAISE MANHOLE LID 6" ABOVE FINISH GRADE.

E01 PRECAST MANHOLE
SCALE: N.T.S.

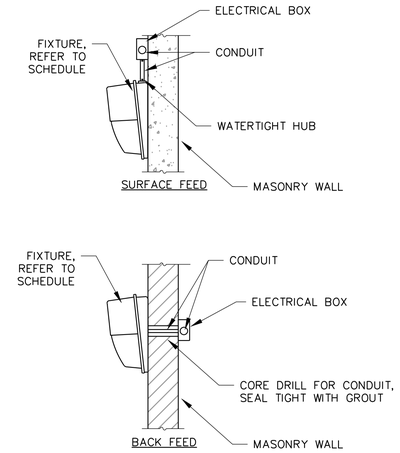

E02 WALL MOUNTED FIXTURE
SCALE: N.T.S.

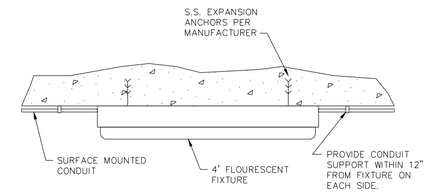

E03 LIGHT MOUNTING DETAIL
SCALE: N.T.S.

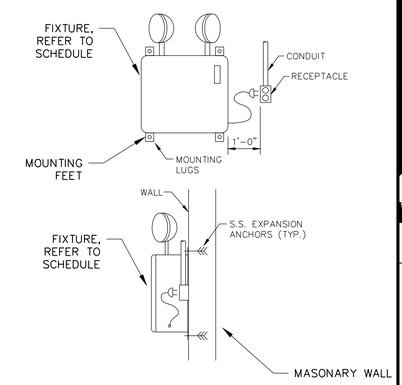

E04 LIGHT MOUNTING DEAIL
SCALE: N.T.S.

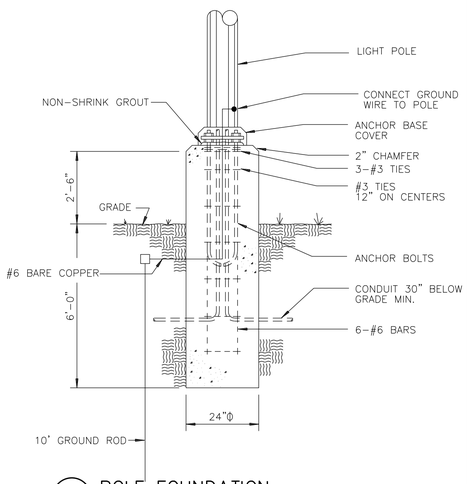

E05 POLE FOUNDATION
SCALE: N.T.S.

E06 NOT USED
SCALE: N.T.S.

E07 NOT USED
SCALE: N.T.S.

E08 NOT USED
SCALE: N.T.S.

E09 NOT USED
SCALE: N.T.S.

E10 NOT USED
SCALE: N.T.S.

E11 NOT USED
SCALE: N.T.S.

ID	TYPE	MANUFACTURE	MODEL	DESCRIPTION
A	4' ENCLOSED AND GASKETED	HOLOPHANE	EMS4 LED 3L IMAFD DPMB	EMS LED SERIES 4; (EMS4LED): EMS4 LED, 3000 LUMENS, ACRYLIC, CLEAR DEEP FROSTED LENS, DUAL PENDANT MOUNTING BRACKET
B	WALLPACK	HOLOPHANE	W4GLED 30C 1000 50K T3M MVOLT DSS124N 1.5 TJEU BL	WALLPACK LED LUMINARY, PRISMATIC GLASS LENS, 30 CHIPS (ONE ENGINE), 1000MA, 5000K, TYPE III MEDIUM DISTRIBUTION, MULTIPLE VOLTAGE (120-277V), PHOTOECELL-SSL TWIS-LOCK, BLACK
C	WALLPACK	HOLOPHANE	W4PLED 10C 700 50K T3M MVOLT DSS124N 1.5 TJEU BL	WALLPACK LED LUMINARY, POLYCARBONATE LENS, 10 CHIPS (ONE ENGINE) 700MA, 5000K, TYPE III MEDIUM DISTRIBUTION, MULTIPLE VOLTAGE (120-277V), PHOTOECELL-SSL TWIS-LOCK, BLACK
D	LED WET LOCATION STANCHION MOUNT	HOLOPHANE	PLED2 12L 4K 12 UN NA CRW L1 P3US-CRW	WET LOCATION LED, 12,000 LUMENS, 4000K CCT, 120V, UNIVERSAL MOUNT (STANCHION), LONG AND NARROW OPTIC CORROSION RESISTANT WHITE, CAST ALUMINUM HOUSING
E	EMERGENCY BATTERY PACK	HOLOPHANE	DM30 WL LED	EMERGENCY LIGHT WITH TWO (2) 1.9W, 9.6V LED LAMP HEADS AND 3.7 WATTS REMOTE CAPACITY, 120V, 90 MINUTE NI-CAD BATTERY. WET LOCATION, TEST SWITCH, STATUS INDICATOR.
F	POLE MOUNT, ONE FIXTURE	HOLOPHANE (FIXTURE)	MGLED 6 5K AS M L A K PCSS	MONGOOSE LED ROADWAY LUMINARY, 6 COB, 5K, AUTO SENSING (120-277V), MEDIUM ROADWAY OPTICS, LOW TILE RANGE, ARCHITECTURAL MOUNTING, BLACK, DSS 120-277V PHOTOCONTROL.
		LSI INDUSTRIES (POLE)	4SQB5 A188 20 X BLK 5DABC	20', 5" SQUARE .188 ALUMINUM, BLACK, TRADITIONAL DRILLING PATTERN, SQUARE BASE COVER, MOUNTING CONFIGURATION AS SHOWN ON DRAWINGS, 2-PIECE BASE COVER.

E12 LIGHT FIXTURE SCHEDULE
SCALE: N.T.S.

ALAN PLUMMER ASSOCIATES, INC.
ENVIRONMENTAL ENGINEERS AND SCIENTISTS
6300 LA CALMA DRIVE, SUITE 400
AUSTIN, TEXAS 78752-3843
PHONE: 512-452-5905 FAX: 512-452-2325
TEXAS REGISTERED ENGINEERING FIRM F-13

NO.	DATE	REVISION	BY

CITY OF WIMBERLEY
221 Stillwater
Wimberley, TX 78676

CITY OF WIMBERLEY
WASTEWATER TREATMENT PLANT AND COLLECTION SYSTEM PROJECT

ELECTRICAL
STANDARD DETAILS
DETAILS II

STATE OF TEXAS
PATRICK N. MOSELEY
72794
LICENSED
PROFESSIONAL ENGINEER
12/14/16

BAR IS ONE INCH ON ORIGINAL DRAWING.
ONE INCH

DESIGNED P. MOSELEY
DRAWN APAI
CHECKED P. MOSELEY
REVIEWED P. MOSELEY

Seq. of

Dwg. No. E-901

1732-002-01

PRINTED: 12/14/2016 5:20 PM C:\Projects\1732-002-01\ACAD\SHEETFILES\ELECTRICAL\E-901.dwg SAVED: 12/4/2016 4:51 PM USER: Moseley, Patrick

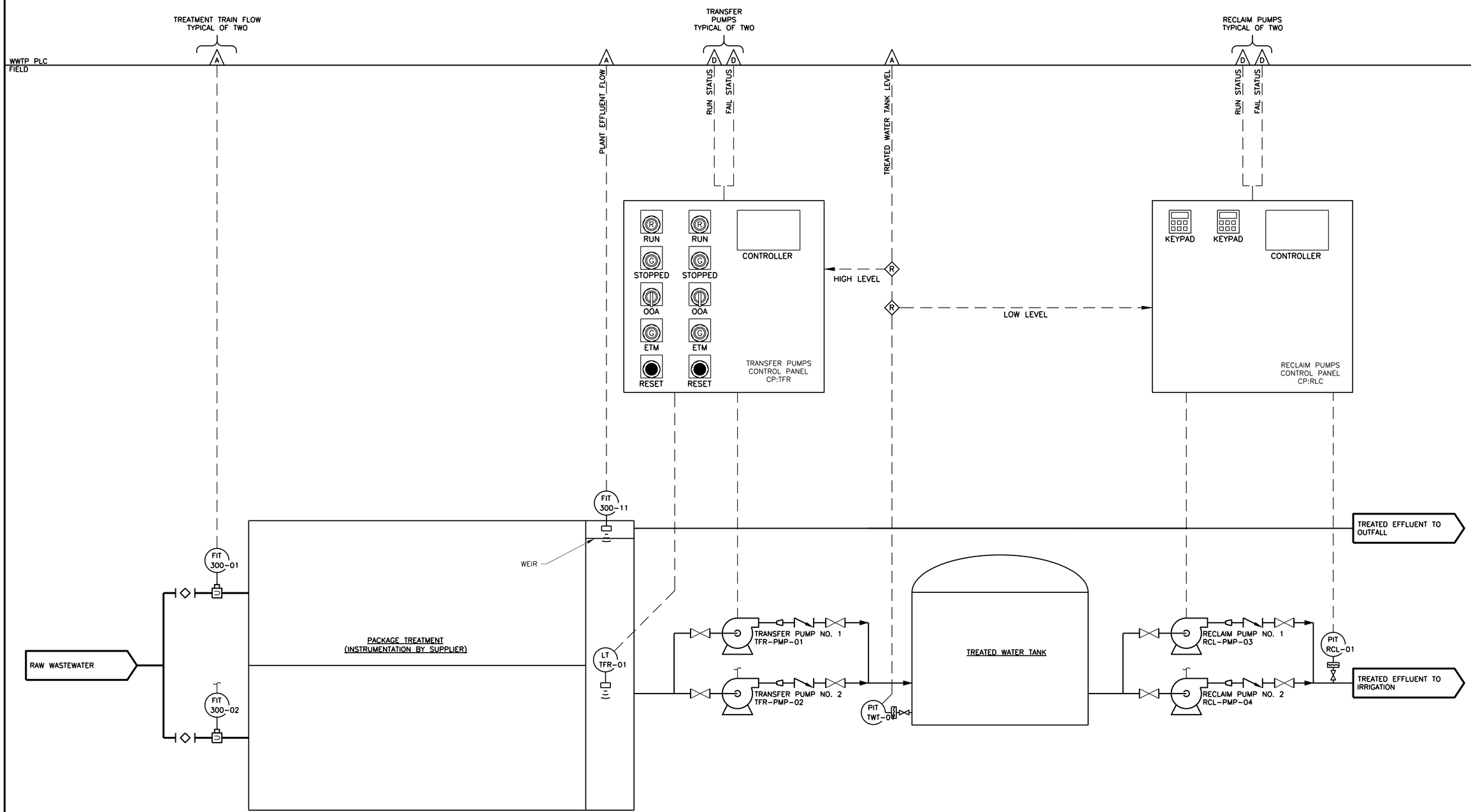

ALAN PLUMMER
ASSOCIATES, INC.
ENVIRONMENTAL
ENGINEERS AND SCIENTISTS
6300 LA CALMA DRIVE, SUITE 400
AUSTIN, TEXAS 78752-3843
PHONE: 512-452-5905 FAX: 512-452-2325
TEXAS REGISTERED ENGINEERING FIRM F-13

NO.	DATE	REVISION	BY

CITY OF WIMBERLEY
221 Stillwater
Wimberley, TX 78676

CITY OF WIMBERLEY
WASTEWATER TREATMENT PLANT AND
COLLECTION SYSTEM PROJECT

INSTRUMENTATION

PROCESS AND INSTRUMENTATION DIAGRAM

STATE OF TEXAS
PATRICK N. MOSELEY
72794
LICENSED
PROFESSIONAL ENGINEER
12/14/16

BAR IS ONE INCH ON
ORIGINAL DRAWING.
ONE INCH

DESIGNED P. MOSELEY
DRAWN APAI
CHECKED P. MOSELEY
REVIEWED P. MOSELEY

Seq. of

Dwg. No. I-201

1732-002-01

PRINTED: 12/14/2016 5:19 PM C:\Projects\1732-002-01\ACAD\SHEETFILES\ELECTRICAL\I-201.dwg SAVED: 12/14/2016 5:17 PM USER: Moseley, Patrick